65W Triple Output Switching Power Supply

RPT-65 series

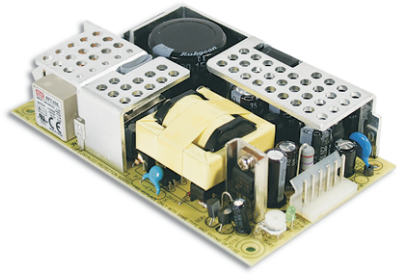

■ Features :

- Universal AC input/Full range
- 12V or 24V high peak output current capability
- **Optional L-Bracket and cover (RPT-65x-C, x=E,F,G)**
- Low leakage current<1mA
- Protections: Short circuit / Overload / Over voltage
- 65W free air convection, 80W with 18CFM forced air
- 100% full load burn-in test
- Fixed switching frequency at 65KHz
- 2 years warranty

SPECIFICATION

MODEL		RPT-65E			RPT-65F			RPT-65G		
OUTPUT	OUTPUT NUMBER	CH1	CH2	CH3	CH1	CH2	CH3	CH1	CH2	CH3
	DC VOLTAGE	12V	5V	-5V	12V	5V	-12V	24V	5V	12V
	RATED CURRENT	4.5A	1.2A	0.5A	4.5A	1.2A	0.5A	2.25A	1.2A	0.5A
	CURRENT RANGE	0.18 ~ 5.8A	0 ~ 1.5A	0 ~ 0.7A	0.18 ~ 5.8A	0 ~ 1.5A	0 ~ 0.7A	0.09 ~ 2.9A	0 ~ 1.5A	0 ~ 0.7A
	PEAK LOAD Note.4	7.5A	Rated load	Rated load	7.5A	Rated load	Rated load	3.75A	Rated load	Rated load
	RATED POWER	62.5W			66W			66W		
	OUTPUT POWER (max.)	Rated output power for convection; 80W with 18CFM min. forced air								
	RIPPLE & NOISE (max.) Note.2	120mVp-p	100mVp-p	120mVp-p	150mVp-p	100mVp-p	150mVp-p	150mVp-p	50mVp-p	100mVp-p
	VOLTAGE ADJ. RANGE	CH1:11.4 ~ 12.8V			CH1:11.4 ~ 12.8V			CH1:22.8 ~ 26.4V		
	VOLTAGE TOLERANCE Note.3	±2.0%	±5.0%	±5.0%	±2.0%	±5.0%	±5.0%	±2.0%	±5.0%	±5.0%
	LINE REGULATION	±1.0%	±1.0%	±1.0%	±1.0%	±1.0%	±1.0%	±1.0%	±1.0%	±1.0%
	LOAD REGULATION	±2.0%	±5.0%	±5.0%	±2.0%	±5.0%	±5.0%	±2.0%	±5.0%	±5.0%
	SETUP, RISE TIME	800ms, 20ms at full load								
	HOLD UP TIME (Typ.)	20ms at full load								
INPUT	VOLTAGE RANGE	90 ~ 264VAC 127 ~370VDC								
	FREQUENCY RANGE	47 ~ 440Hz								
	EFFICIENCY (Typ.)	77%			77%			81%		
	AC CURRENT (Typ.)	1.5A/115VAC 0.9A/230VAC								
	INRUSH CURRENT (Typ.)	COLD START 25A/115VAC 50A/230VAC								
	LEAKAGE CURRENT	<1mA								
PROTECTION	OVERLOAD	90 ~ 125W output power								
		Protection type : Hiccup mode, recovers automatically after fault condition is removed.								
	OVER VOLTAGE	CH1:13.8 ~ 16.2V			CH1:13.8 ~ 16.2V			CH1:27.6 ~ 32.4V		
		Protection type : Hiccup mode, recovers automatically after fault condition is removed.								
ENVIRONMENT	WORKING TEMP.	-20 ~ +60℃ (Refer to "Derating Curve")								
	WORKING HUMIDITY	20 ~ 90% RH non-condensing								
	STORAGE TEMP., HUMIDITY	-40 ~ +85℃, 10 ~ 95% RH								
	TEMP. COEFFICIENT	±0.04%/℃ (0 ~ 50℃) on CH1 output								
	VIBRATION	10 ~ 500Hz, 2G 10min./1cycle, period for 60min. each along X, Y, Z axes								
SAFETY & EMC (Note 5)	SAFETY STANDARDS	UL60950-1, TUV EN60950-1 approved								
	WITHSTAND VOLTAGE	I/P-O/P:3KVAC I/P-FG:1.5KVAC O/P-FG:0.5KVAC								
	ISOLATION RESISTANCE	I/P-O/P, I/P-FG, O/P-FG:100M Ohms / 500VDC / 25℃/ 70% RH								
	EMC EMISSION	Compliance to EN55022 (CISPR22) Class B, EN61000-3-2,-3								
	EMC IMMUNITY	Compliance to EN61000-4-2,3,4,5,6,8,11, EN55024, light industry level, criteria A								
OTHERS	MTBF	288.1K hrs min. MIL-HDBK-217F (25℃)								
	DIMENSION	PCB:127*76*28mm (L*W*H) ; with optional CASE:130*85*37mm (L*W*H)								
	PACKING	PCB:0.24Kg; 63pcs/16Kg/1.35CUFT ; with optional CASE:0.47Kg;32pcs/16Kg/0.64CUFT								
NOTE	1. All parameters NOT specially mentioned are measured at 230VAC input, rated load and 25℃ of ambient temperature. 2. Ripple & noise are measured at 20MHz of bandwidth by using a 12" twisted pair-wire terminated with a 0.1uf & 47uf parallel capacitor. 3. Tolerance : includes set up tolerance, line regulation and load regulation. **4. 10% duty cycle maximum within every second. Average output power should not exceed the rated power, output voltage above 90% DC voltage.** 5. The power supply is considered a component which will be installed into a final equipment. The final equipment must be re-confirmed that it still meets EMC directives. For guidance on how to perform these EMC tests, please refer to "EMI testing of component power supplies." (as available on http://www.meanwell.com)									

■ Mechanical Specification

Case No. 946A Unit:mm

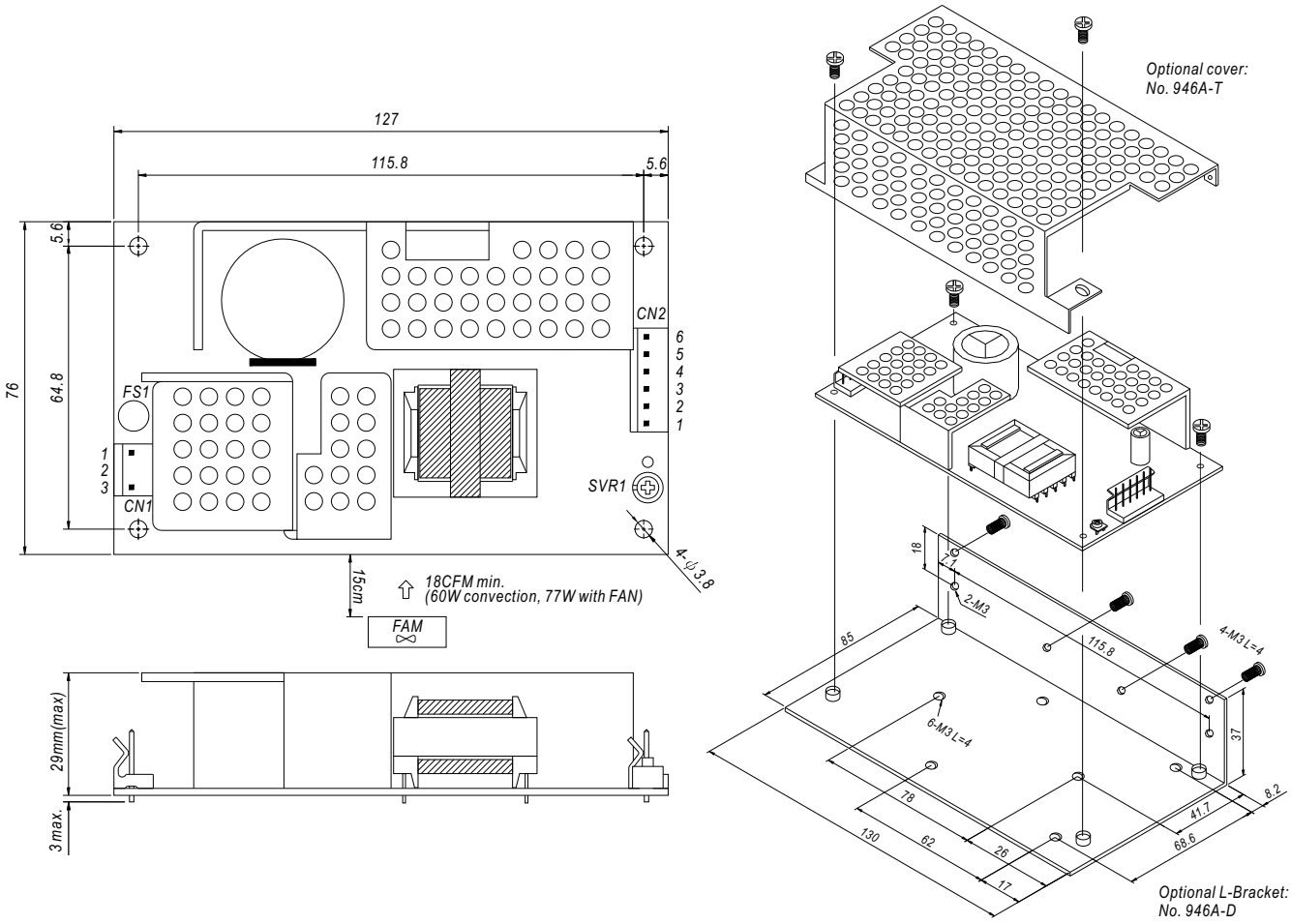

AC Input Connector (CN1) : Molex 5273-03 or equivalent

Pin No.	Assignment	Mating Housing	Terminal
1	AC/L	Molex 5195 or equivalent	Molex 5194 or equivalent
2	No Pin		
3	AC/N		

DC Output Connector (CN2) : Molex 5273-06 or equivalent

Pin No.	Assignment	Mating Housing	Terminal
1,2	V1	Molex 5195 or equivalent	Molex 5194 or equivalent
3,4	GND		
5	V2		
6	V3		

■ Block Diagram

fosc : 65KHz

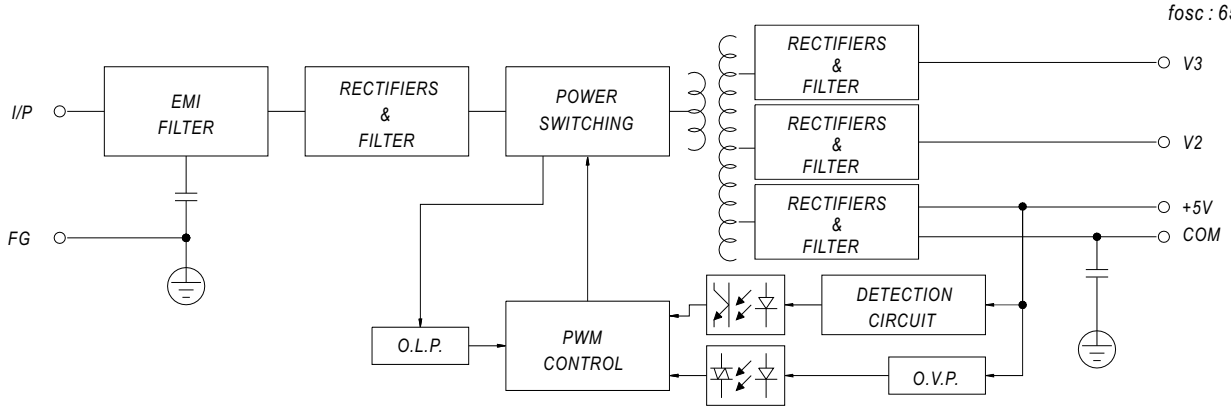

■ Derating Curve

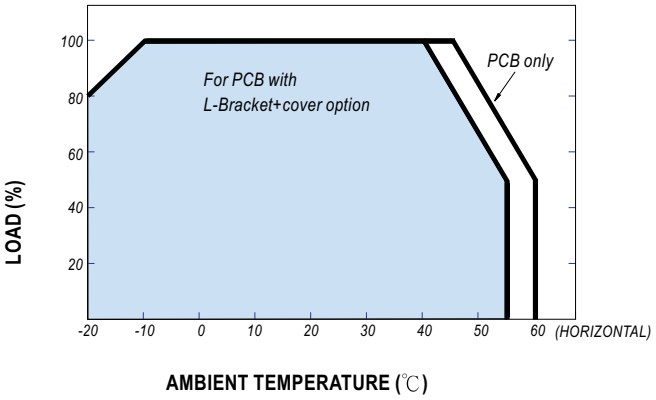

■ Output Derating VS Input Voltage

