MEAN WELL

60W Triple Output Medical Type

RPT-60 series



Features :

- 4"x2" miniature size
- Universal AC input / Full range
- Low leakage current<200uA
- Protections: Short circuit / Overload / Over voltage
- Cooling by free air convection
- UL60601-1/IEC60601-1/EN60601-1 medical safety approved
- UL60950-1/IEC60950-1/EN60950-1 ITE safety approved
- Fixed switch frequency at 100KHz
- 3 years warranty

SPECIFICATION

MODEL		RPT-60A			RPT-60B			RPT-60C		
OUTPUT	OUTPUT NUMBER	CH1	CH2	CH3	CH1	CH2	CH3	CH1	CH2	CH3
	DC VOLTAGE	5V	12V	-5V	5V	12V	-12V	5V	15V	-15V
	RATED CURRENT	4A	2A	0.5A	4A	2A	0.5A	4A	1.5A	0.5A
	CURRENT RANGE	0.5 ~ 4.4A	0.1 ~ 2.2A	0.1 ~ 0.55A	0.5 ~ 4.4A	0.1 ~ 2.2A	0.1 ~ 0.55A	0.5 ~ 4.4A	0.1 ~ 1.65A	0.1 ~ 0.55A
	RATED POWER	46.5W			50W			50W		
	PEAK LOAD(10sec.) Note.4	51.15W			55W			55W		
	RIPPLE & NOISE (max.) Note.2	80mVp-p	80mVp-p	80mVp-p	80mVp-p	80mVp-p	100mVp-p	80mVp-p	100mVp-p	150mVp-p
	VOLTAGE TOLERANCE Note.3	+3,-2%	±6.0%	+9,-8%	+3,-2%	±6.0%	+10,-6%	+3,-2%	±6.0%	±8.0%
	LINE REGULATION	±0.5%	±1.0%	±1.0%	±0.5%	±1.0%	±2.0%	±0.5%	±2.0%	±2.0%
	LOAD REGULATION	±1.5%	±2.0%	+5,-7%	±1.5%	±2.0%	±5.0%	±1.5%	±3.0%	±4.0%
	SETUP, RISE TIME	200ms, 15ms/230VAC 200ms, 15ms/115VAC at full load								
	HOLD UP TIME (Typ.)	70ms/230VAC 15ms/115VAC at full load								
INPUT	VOLTAGE RANGE	90 ~ 264VAC 127 ~ 370VDC								
	FREQUENCY RANGE	47 ~ 63Hz								
	EFFICIENCY (Typ.)	77%			78%			79%		
	AC CURRENT (Typ.)	1.1A/115VAC 0.7A/230VAC								
	INRUSH CURRENT (Typ.)	COLD START 60A/230VAC 30A/115VAC								
	LEAKAGE CURRENT	For earth <200uA/264VAC, For patient <100uA/264VAC								
PROTECTION	OVERLOAD	115 ~ 150% rated output power								
		Protection type : Hiccup mode, recovers automatically after fault condition is removed								
	OVER VOLTAGE	CH1: 5.75 ~ 6.75V								
		Protection type : Shut down o/p voltage, re-power on to recover								
ENVIRONMENT	WORKING TEMP.	-20 ~ +65℃ (Refer to output load derating curve)								
	WORKING HUMIDITY	20 ~ 90% RH non-condensing								
	STORAGE TEMP., HUMIDITY	-40 ~ +85℃, 10 ~ 95% RH								
	TEMP. COEFFICIENT	±0.03%/℃ (0 ~ 45℃)								
	VIBRATION	10 ~ 500Hz, 2G 10min./1cycle, period for 60min. each along X, Y, Z axes								
SAFETY & EMC (Note 5)	SAFETY STANDARDS	UL60950-1, TUV EN60950-1, UL60601-1, TUV EN60601-1, IEC60601-1 approved								
	WITHSTAND VOLTAGE	I/P-O/P:4KVAC I/P-FG:1.5KVAC O/P-FG:1.5KVAC								
	ISOLATION RESISTANCE	I/P-O/P, I/P-FG, O/P-FG:100M Ohms / 500VDC / 25℃/ 70% RH								
	EMI CONDUCTION & RADIATION	Compliance to EN55011(CISPR11),EN55022 (CISPR22) Class B								
	HARMONIC CURRENT	Compliance to EN61000-3-2,-3								
	EMS IMMUNITY	Compliance to EN61000-4-2,3,4,5,6,8,11; ENV50204, EN55024, EN60601-1-2, EN61204-3, medical level, criteria A								
OTHERS	MTBF	677.8Khrs min. MIL-HDBK-217F (25℃)								
	DIMENSION	101.6*50.8*29mm (L*W*H)								
	PACKING	0.15Kg; 96pcs/15.4Kg/0.89CUFT								

NOTE

1. All parameters NOT specially mentioned are measured at 230VAC input, rated load and 25℃ of ambient temperature.
2. Ripple & noise are measured at 20MHz of bandwidth by using a 12" twisted pair-wire terminated with a 0.1uf & 47uf parallel capacitor.
3. Tolerance : includes set up tolerance, line regulation and load regulation.
4. 33% Duty cycle maximum within every 30 seconds. Average output power should not exceed the rated power.
5. The power supply is considered a component which will be installed into a final equipment. The final equipment must be re-confirmed that it still meets EMC directives. For guidance on how to perform these EMC tests, please refer to “EMI testing of component power supplies.” (as available on http://www.meanwell.com)
6. Length of set up time is measured at cold first start. Turning ON/OFF the power supply may lead to increase of the set up time.
7. Heat Sink HS1,HS2 can not be shorted.

MEAN WELL

60W Triple Output Medical Type

RPT-60 series



■ Features :

- 4"x2" miniature size
- Universal AC input / Full range
- Low leakage current<200uA
- Protections: Short circuit / Overload / Over voltage
- Cooling by free air convection
- UL60601-1/IEC60601-1/EN60601-1 medical safety approved
- UL60950-1/IEC60950-1/EN60950-1 ITE safety approved
- Fixed switch frequency at 100KHz
- 3 years warranty

SPECIFICATION

MODEL		RPT-60D			RPT-6003		
OUTPUT	OUTPUT NUMBER	CH1	CH2	CH3	CH1	CH2	CH3
	DC VOLTAGE	5V	24V	12V	3.3V	5V	12V
	RATED CURRENT	3.5A	1A	0.5A	5A	3A	0.7A
	CURRENT RANGE	0.5 ~ 3.85A	0.1 ~ 1.1A	0.1 ~ 0.55A	0.5 ~ 5.5A	0.3 ~ 3.3A	0.1 ~ 0.77A
	RATED POWER	47.5W			39.9W		
	PEAK LOAD(10sec.) Note.4	52.25W			43.9W		
	RIPPLE & NOISE (max.) Note.2	80mVp-p	150mVp-p	80mVp-p	80mVp-p	80mVp-p	80mVp-p
	VOLTAGE TOLERANCE Note.3	+3,-2%	±6.0%	±8.0%	+3,-2%	±8.0%	+10,-6%
	LINE REGULATION	±0.5%	±2.0%	±2.0%	±0.5%	±1.0%	±2.0%
	LOAD REGULATION	±1.5%	±3.0%	±4.0%	±1.5%	±2.0%	+5.5,-5%
	SETUP, RISE TIME	200ms, 15ms/230VAC 200ms, 15ms/115VAC at full load					
	HOLD UP TIME (Typ.)	70ms/230VAC 15ms/115VAC at full load					
INPUT	VOLTAGE RANGE	90 ~ 264VAC 127 ~ 370VDC					
	FREQUENCY RANGE	47 ~ 63Hz					
	EFFICIENCY (Typ.)	79%			75%		
	AC CURRENT (Typ.)	1.1A/115VAC 0.7A/230VAC					
	INRUSH CURRENT (Typ.)	COLD START 60A/230VAC 30A/115VAC					
	LEAKAGE CURRENT	For earth <200uA/264VAC, For patient <100uA/264VAC					
PROTECTION	OVERLOAD	115 ~ 150% rated output power					
		Protection type : Hiccup mode, recovers automatically after fault condition is removed					
	OVER VOLTAGE	CH1: 5.75 ~ 6.75V			CH1: 3.8 ~ 4.45V		
		Protection type : Shut down o/p voltage, re-power on to recover					
ENVIRONMENT	WORKING TEMP.	-20 ~ +65℃ (Refer to output load derating curve)					
	WORKING HUMIDITY	20 ~ 90% RH non-condensing					
	STORAGE TEMP., HUMIDITY	-40 ~ +85℃, 10 ~ 95% RH					
	TEMP. COEFFICIENT	±0.03%/℃ (0 ~ 45℃)					
	VIBRATION	10 ~ 500Hz, 2G 10min./1cycle, period for 60min. each along X, Y, Z axes					
SAFETY & EMC (Note 5)	SAFETY STANDARDS	UL60950-1, TUV EN60950-1, UL60601-1, TUV EN60601-1, IEC60601-1 approved					
	WITHSTAND VOLTAGE	I/P-O/P:4KVAC I/P-FG:1.5KVAC O/P-FG:1.5KVAC					
	ISOLATION RESISTANCE	I/P-O/P, I/P-FG, O/P-FG:100M Ohms / 500VDC / 25℃/ 70% RH					
	EMI CONDUCTION & RADIATION	Compliance to EN55011(CISPR11),EN55022 (CISPR22) Class B					
	HARMONIC CURRENT	Compliance to EN61000-3-2,-3					
	EMS IMMUNITY	Compliance to EN61000-4-2,3,4,5,6,8,11; ENV50204, EN55024, EN60601-1-2, EN61204-3, medical level, criteria A					
OTHERS	MTBF	677.8Khrs min. MIL-HDBK-217F (25℃)					
	DIMENSION	101.6*50.8*29mm (L*W*H)					
	PACKING	0.15Kg; 96pcs/15.4Kg/0.89CUFT					

NOTE

1. All parameters NOT specially mentioned are measured at 230VAC input, rated load and 25℃ of ambient temperature.
2. Ripple & noise are measured at 20MHz of bandwidth by using a 12" twisted pair-wire terminated with a 0.1uf & 47uf parallel capacitor.
3. Tolerance : includes set up tolerance, line regulation and load regulation.
4. 33% Duty cycle maximum within every 30 seconds. Average output power should not exceed the rated power.
5. The power supply is considered a component which will be installed into a final equipment. The final equipment must be re-confirmed that it still meets EMC directives. For guidance on how to perform these EMC tests, please refer to "EMI testing of component power supplies." (as available on http://www.meanwell.com)
6. Length of set up time is measured at cold first start. Turning ON/OFF the power supply may lead to increase of the set up time.
7. Heat Sink HS1,HS2 can not be shorted.

■ Mechanical Specification

Unit:mm

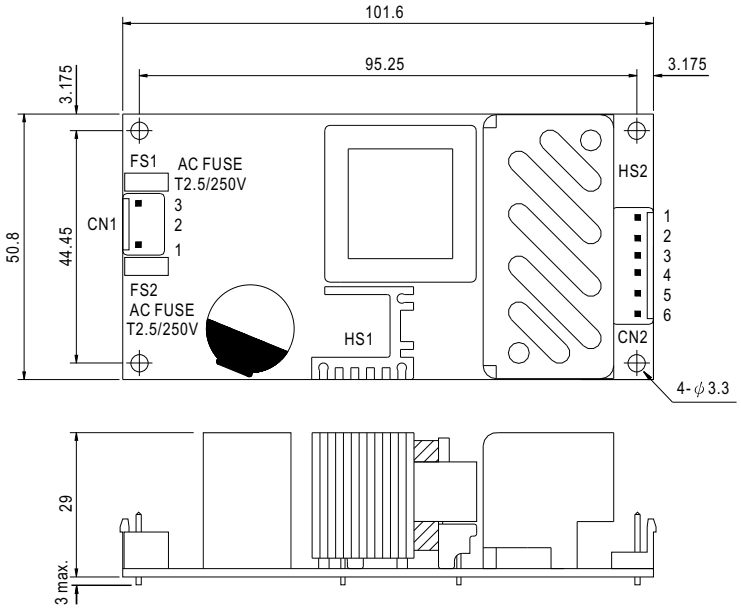

AC Input Connector (CN1) : JST B3P-VH or equivalent

Pin No.	Assignment	Mating Housing	Terminal
1	AC/N	JST VHR or equivalent	JST SVH-21T-P1.1 or equivalent
2	No Pin		
3	AC/L		

⚠ HS1,HS2 can not be shorted

DC Output Connector (CN2) : JST B6P-VH or equivalent

Pin No.	Assignment	Mating Housing	Terminal
1,2	V1	JST VHR or equivalent	JST SVH-21T-P1.1 or equivalent
3,4	COM		
5	V2		
6	V3		

■ Block Diagram

fosc : 100KHz

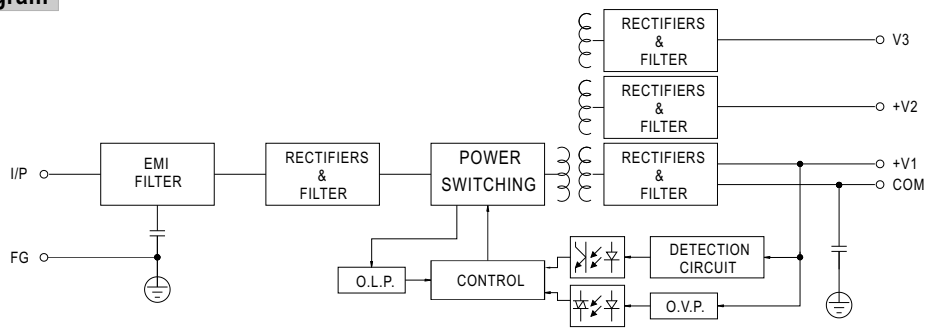

■ Derating Curve

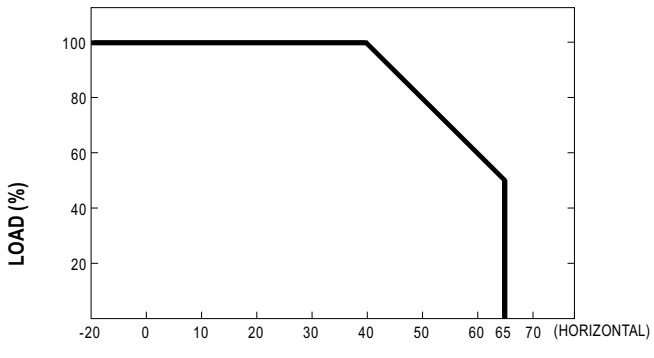

AMBIENT TEMPERATURE (℃)

■ Output Derating VS Input Voltage

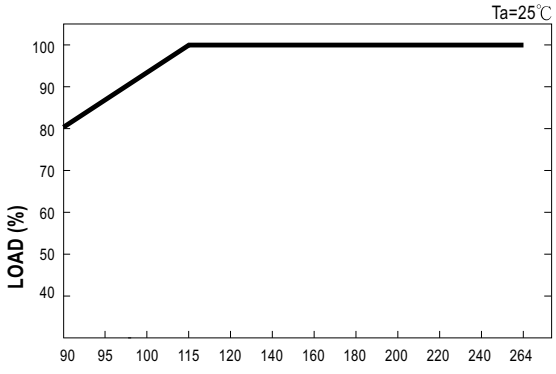

INPUT VOLTAGE (VAC) 60Hz