LOW RIPPLE VOLTAGE REGULATOR WITH EXTERNAL TRANSISTOR

RN5RF SERIES

APPLICATION MANUAL

NO. EA-043-0006

LOW RIPPLE VOLTAGE REGULATOR WITH EXTERNAL TRANSISTOR

RN5RF SERIES

OUTLINE

The RN5RF Series are voltage regulator ICs which control external driver transistors with high ripple rejection, high accu-racy output voltage, low supply current by CMOS process. Each of these voltage regulator ICs consists of a voltage refer-ence unit, an error amplifier, output voltage setting resistor, short circuit current limiting circuit and chip enable circuit. These ICs are suitable for constructing regulators with ultra low dropout voltage and an output current in the range of several tens of mA and several hundreds mA. In addition to low supply current by CMOS process, chip enable function can be used to conserve battery life during standby.

Furthermore, a supreme ripple rejection and a transient response are suited for portable communicatior such as cell phones, PDAs, walky talkies. SOT23-5 (Mini Mold) package is available.

FEATURES

- Ultra Low Supply Current .....TYP. 30μA
- Standby Mode .....TYP. 0.1μA
- High Accuracy Output Voltage .....±2.0%
- High Ripple Rejection .....TYP. 60dB/f=1kHz
- Low Dropout Voltage .....TYP. 0.1V/I_{OUT}=100mA, dependent on External Tr.
- Low Temperature Drift .....TYP. ±100ppm/°C
- High Line Regulation .....TYP. 0.05%/V
- Output Voltage .....Stepwise setting with a step of 0.1V in the range of 1.8V to 6.0V
- Current Limit for external Tr .....TYP. 8mA, Limit a base current

APPLICATIONS

- Power source for battery-powered equipment
- Telecommunications, Cameras, VCRs
- Power source for domestic appliances

BLOCK DIAGRAM

RN5RFXXA

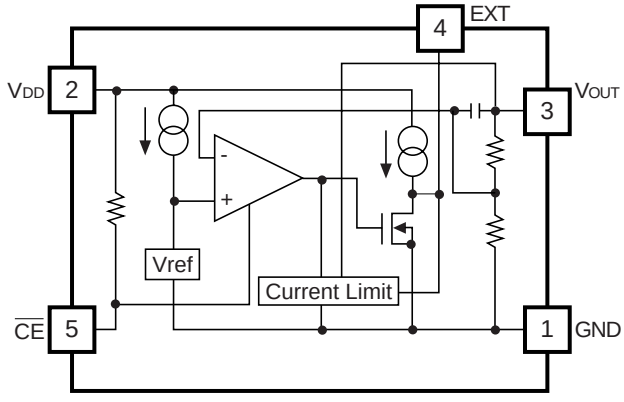

RN5RFXXB

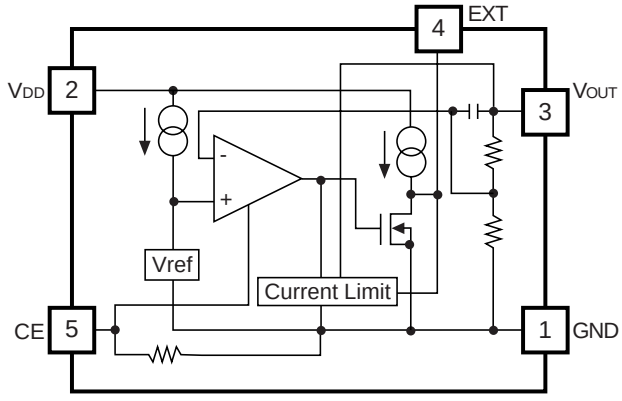

SELECTION GUIDE

The output voltage, the chip enable active type, the packing type and the taping type for the ICs can be selected at the user's request.

The selection can be made by designating the part number as shown below:

RN5RF XXXX–XX← Part Number

↑ ↑↑ ↑

a bc d

Code	Contents
a	Setting Output Voltage (V_{OUT}) : Stepwise setting with a step of 0.1V in the range of 1.8V to 6.0V is possible.
b	Designation of Chip enable Active Type A: “L” active type B: “H” active type
c	Designation of Packing type A: Taping C: Antistatic bag only for samples
d	Designation of Taping type Ex. TR, TL (refer to Taping Specifications, TR type is prescribed as a standard.)

PIN CONFIGURATION

SOT-23-5

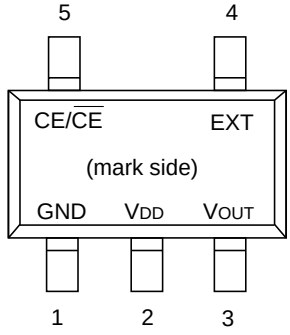

PIN DESCRIPTION

Pin No.	Symbol	Pin Description
1	GND	Ground Pin
2	V_{DD}	Input Pin
3	V_{OUT}	Output Pin
4	EXT	External Transistor Drive Pin (CMOS Output)
5	CE or $\overline{CE}$	Chip Enable Pin

ABSOLUTE MAXIMUM RATINGS

Symbol	Item	Rating	Unit
V_{IN}	Input Voltage	12	V
V_{CE}	Input Voltage for CE/$\overline{CE}$ Pin	-0.3 to V_{IN} +0.3	V
V_{EXT}	EXT Output Voltage	12	V
I_{EXT}	EXT Output Current	50	mA
P_D	Power Dissipation	150	mW
Topt	Operating Temperature Range	-40 to +85	°C
Tstg	Storage Temperature Range	-55 to +125	°C

ABSOLUTE MAXIMUM RATINGS

Absolute Maximum ratings are threshold limit values that must not be exceeded even for an instant under any conditions. Moreover, such values for any two items must not be reached simultaneously. Operation above these absolute maximum ratings may cause degradation or permanent damage to the device. These are stress ratings only and do not necessarily imply functional operation below these limits.

ELECTRICAL CHARACTERISTICS

Topt=25°C

Symbol	Item	Conditions	MIN.	TYP.	MAX.	Unit
V_{OUT}	Output Voltage	V_{IN}-V_{OUT}=1.0V I_{OUT}=50mA	V_{OUT} ×0.98		V_{OUT} ×1.02	V
I_{OUT}	Output Current	V_{IN}-V_{OUT}=1.0V		1.0[*1]		A
I_{EXT}	EXT Current	V_{IN}=4.0V, V_{EXT}=2.0V	5	8	15	mA
$\Delta V_{OUT}/\Delta I_{OUT}$	Load Regulation	V_{IN}-V_{OUT}=1.0V 1mA≤I_{OUT}≤100mA	-60		60	mV
V_{DIF}	Dropout Voltage	I_{OUT}=100mA, I_{OUT}=0mA		0.1	0.2	V
I_{SS}	Supply Current	V_{IN}-V_{OUT}=1.0V		30	50	μA
Istandby	Standby Current	V_{IN}=10.0V	0.01	0.1	1.0	μA
$I_{EXTleak}$	EXT Leakage Current				0.5	μA
$\Delta V_{OUT}/\Delta V_{IN}$	Line Regulation	I_{OUT}=50mA V_{OUT}+0.5V≤V_{IN}≤10V	0	0.05	0.30	%/V
R_R	Ripple Rejection	f=1kHz, sinusoidal 0.5Vp-p V_{IN}-V_{OUT}=1.0V		60		dB
V_{IN}	Input Voltage				10	V
V_{EXT}	EXT Output Voltage				10	V
$\Delta V_{OUT}/\Delta Topt$	Output Voltage Temperature Coefficient	I_{OUT}=10mA -40°C≤Topt≤85°C		±100		ppm/°C
R_{PU}	Pull up resistance for CE pin			4		MΩ
V_{CEH}	CE Input Voltage "H"		1.5		V_{IN}	V
V_{CEL}	CE Input Voltage "L"		0		0.25	V

*1) The output current depends on the performance of external PNP transistor. Use External PNP transistor of a low saturation type, with an h_{FE} between 100 and 300.

*) With respect to Test Circuit, refer to Typical Application.

Topt=25°C

Symbol	Item	Conditions	MIN.	TYP.	MAX.	Unit
V_{OUT}	Output Voltage	VIN-VOUT=1.0V I_{OUT}=50mA	V_{OUT} ×0.98		V_{OUT} ×1.02	V
I_{OUT}	Output Current	V_{IN}-V_{OUT}=1.0V		1.0*1		A
I_{EXT}	EXT Current	V_{IN}=4.0V, V_{EXT}=2.0V	5	8	15	mA
$\Delta V_{OUT}/\Delta I_{OUT}$	Load Regulation	V_{IN}-V_{OUT}=1.0V 1mA≤I_{OUT}≤100mA	-60		60	mV
V_{DIF}	Dropout Voltage	I_{OUT}=100mA		0.1	0.2	V
I_{SS}	Supply Current	V_{IN}–V_{OUT}=1.0V I_{OUT}=0mA		30	50	μA
Istandby	Standby Current	V_{IN}=10.0V	0.01	0.1	1.0	μA
$I_{EXTleak}$	EXT Leakage Current				0.5	μA
$\Delta V_{OUT}/\Delta V_{IN}$	Line Regulation	I_{OUT}=50mA V_{OUT}+0.5V≤V_{IN}≤10V	0	0.05	0.30	%/V
R_R	Ripple Rejection	f=1kHz, sinusoidal 0.5Vp-p V_{IN}–V_{OUT}=1.0V		60		dB
V_{IN}	Input Voltage				10	V
V_{EXT}	EXT Output Voltage				10	V
$\Delta V_{OUT}/\Delta Topt$	Output Voltage Temperature Coefficient	I_{OUT}=10mA -40°C≤Topt≤85°C		±100		ppm/°C
R_{PD}	Pull down resistance for CE pin			4		MΩ
V_{CEH}	CE Input Voltage “H”		1.5		V_{IN}	V
V_{CEL}	CE Input Voltage “L”		0		0.25	V

*1) The output current depends on the performance of external PNP transistor. Use External PNP transistor of a low saturation type, with an h_{FE} between 100 and 300.

*) With respect to Test Circuit, refer to Typical Application.

OPERATION

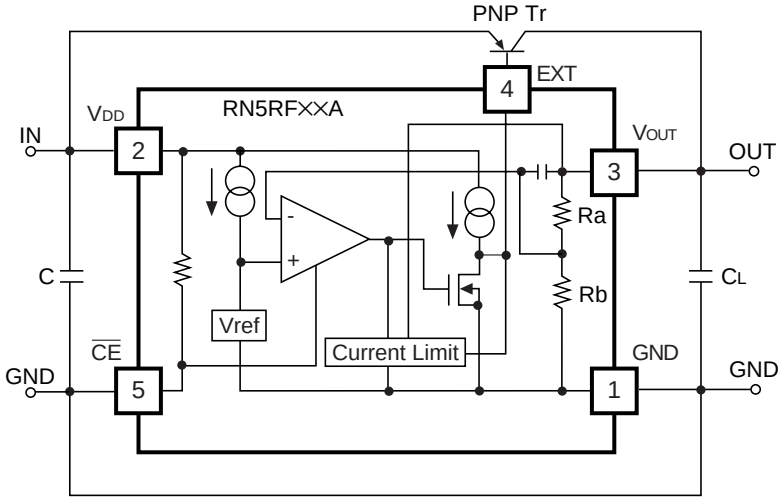

In these ICs, Output Voltage V_{OUT} is detected by Feed-back Resistors, R_A and R_B and the detected Output Voltage is com-pared with a reference voltage by Error Amplifier so that the base current of External PNP Transistor can be adjusted and Output Voltage V_{OUT} is able to be regulated.

The base current of an external Tr. is monitored and controlled by an internal Base Current Limit circuit to keep current within a proper range. Furthermore, the other current limit circuit prevents a problem which is that a base current increas-es sharply when input Voltage V_{IN} becomes lower than Set Output Voltage.

Notes on selecting external components
(1) On external PNP transistor Be careful of output current, input voltage and power dissipation of External PNP Transistor. External PNP Transistor with a low V_{CE} (sat) and an h_{FE} between 100 and 300 is suitable.
(2) On phase compensation In these ICs, phase compensation is made for securing stable operation on the output stage even if the load current is varied. For this purpose, be sure to use a capacitor C_L (tantalum type) with a capacitance of 10μF of more. There may be the case the loop oscillation takes place when a tantalum capacitor C_L with a large ESR is used, so select the C_L carefully including the frequency characteristics.

TEST CIRCUITS

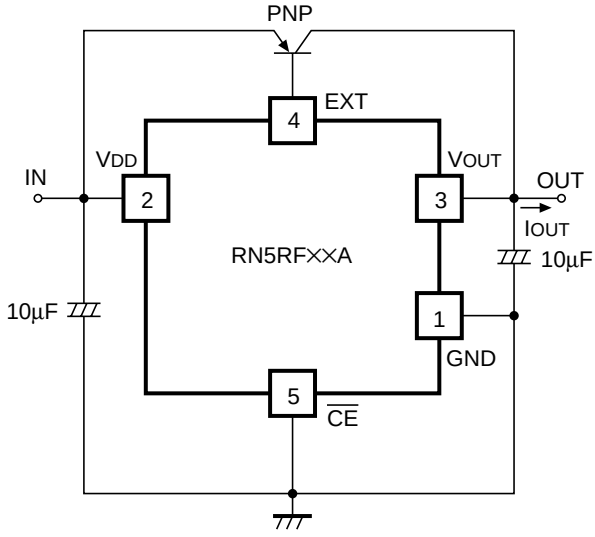

Basic Test Circuit

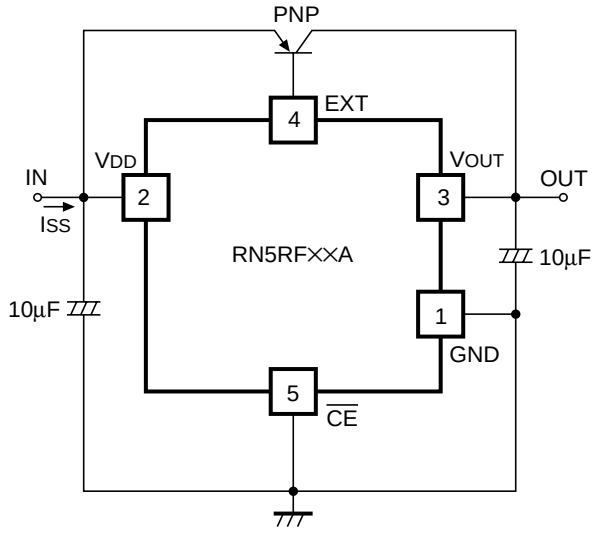

Test Circuit for Supply Current

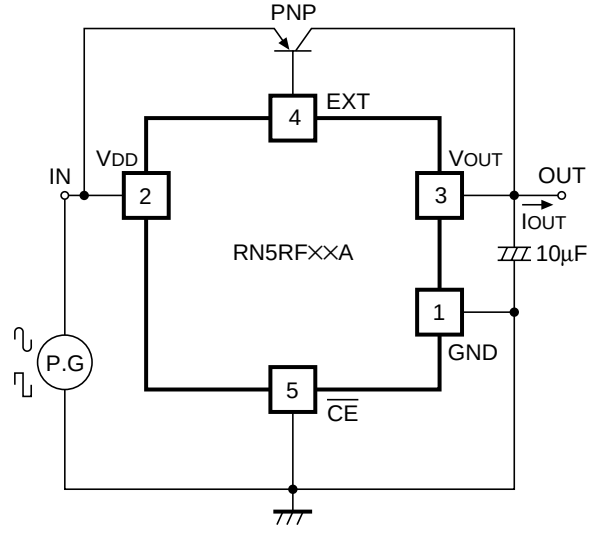

Test Circuit for Ripple Rejection and Line Transient Response

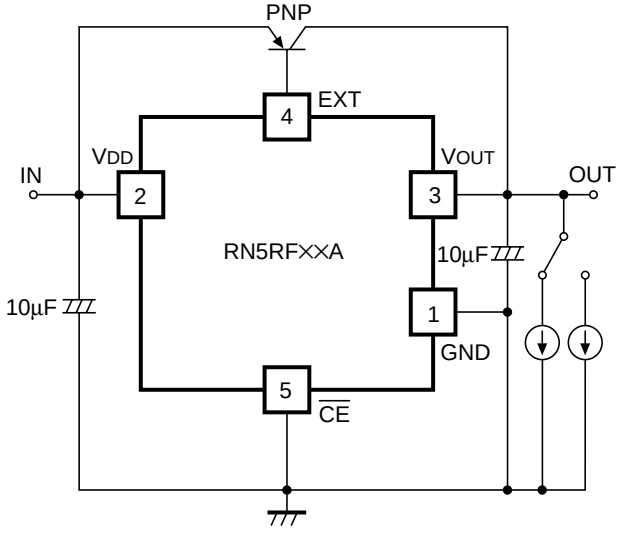

Test Circuit for Load Transient Response

TYPICAL CHARACTERISTICS

1) Output Voltage vs. Input Voltage (Topt=25°C)

RN5RF30A

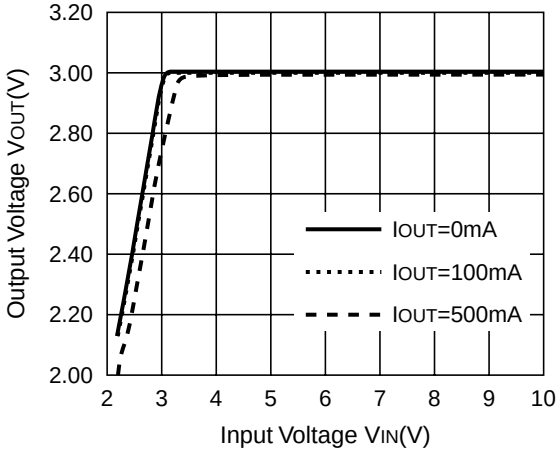

RN5RF50A

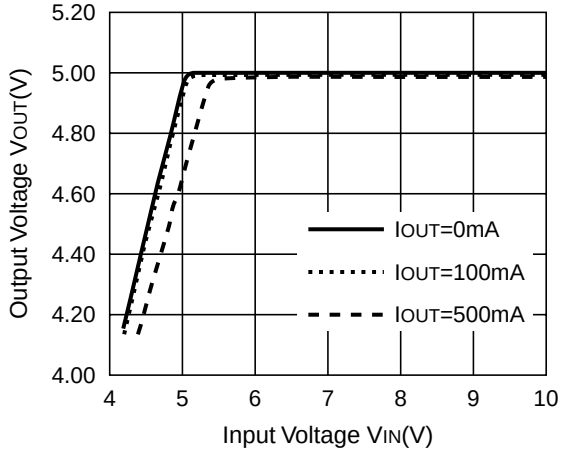

2) Output Voltage vs. Output Current (Topt=25°C)

RN5RF30A

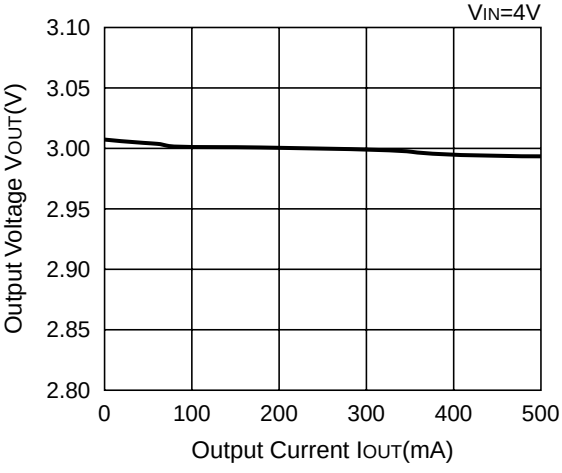

RN5RF50A

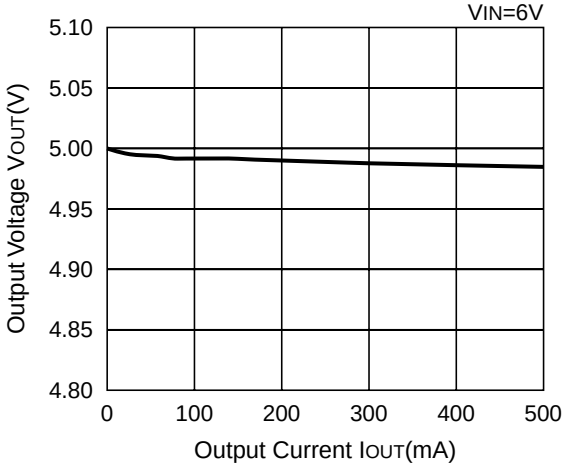

3) Dropout Voltage vs. Output Current

RN5RF30A

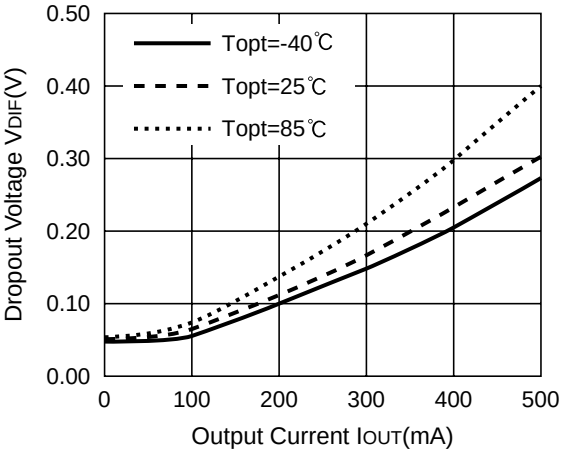

RN5RF50A

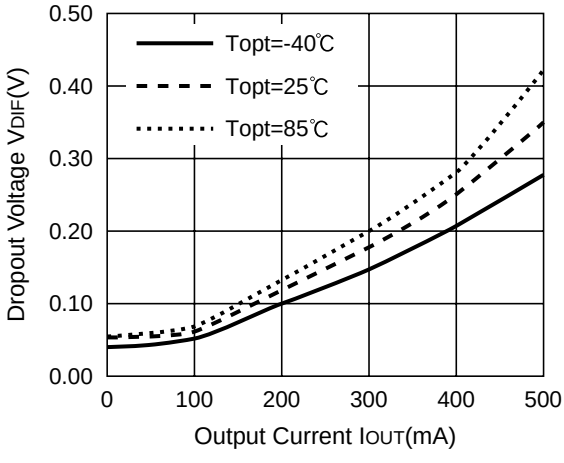

4) Output Voltage vs. Temperature

RN5RF30A

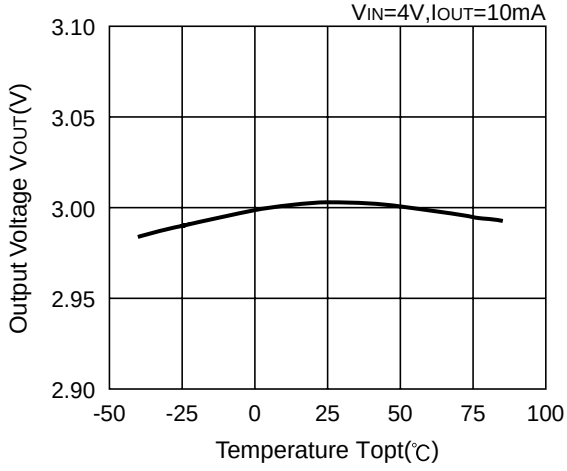

RN5RF50A

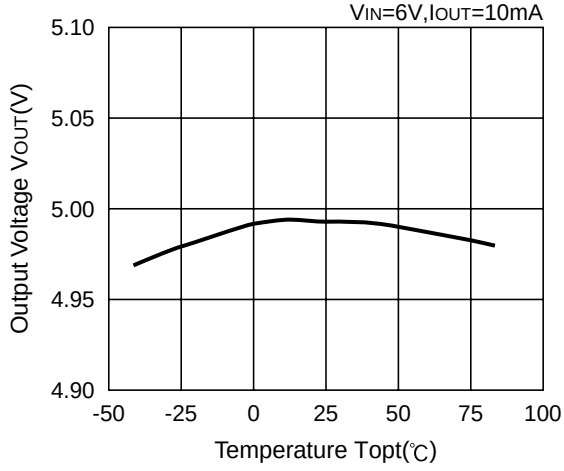

5) Supply Current vs. Input Voltage (Topt=25°C)

RN5RF30A

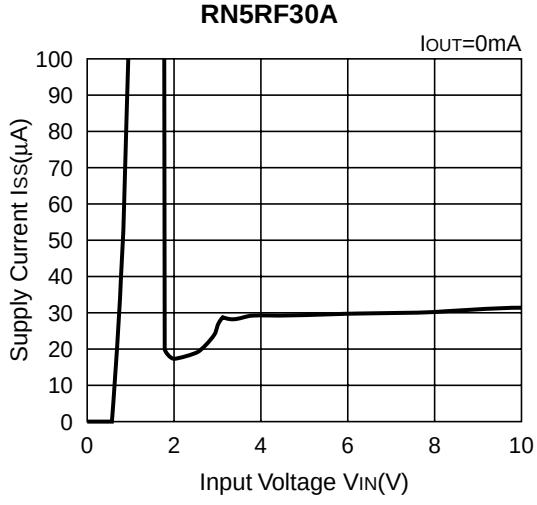

RN5RF50A

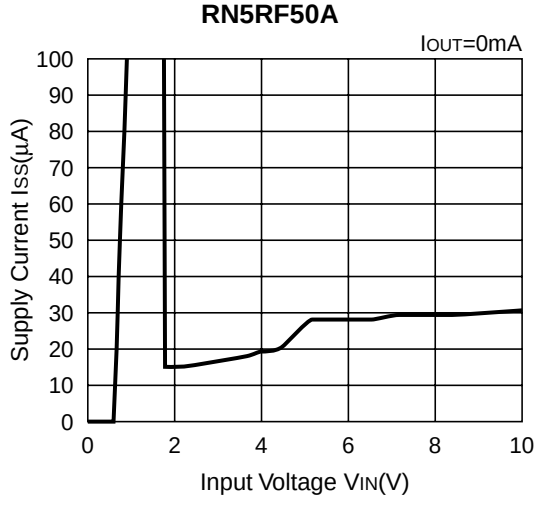

6) Supply Current vs. Temperature

RN5RF30A

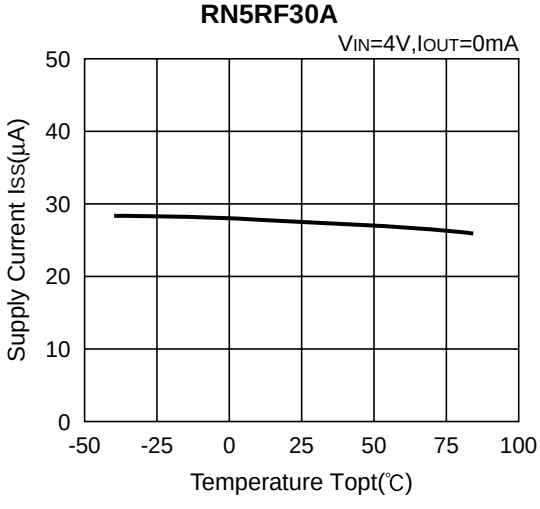

RN5RF50A

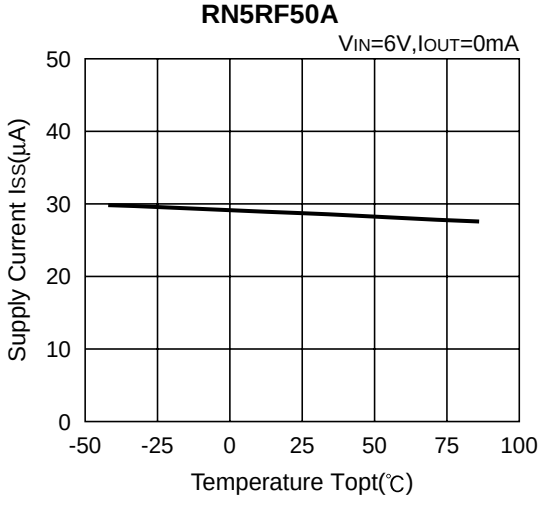

7) Ripple Rejection vs. Frequency (Topt=25°C)

RN5RF30A

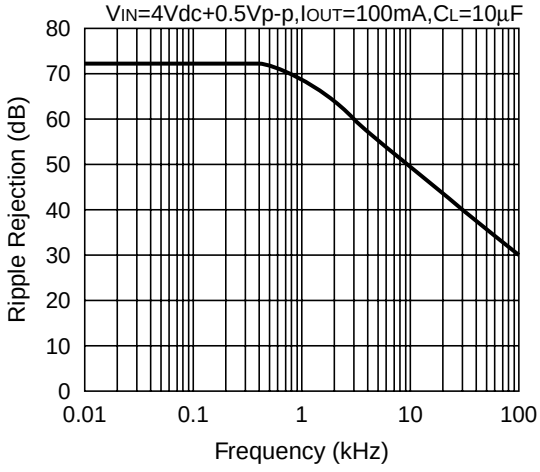

RN5RF50A

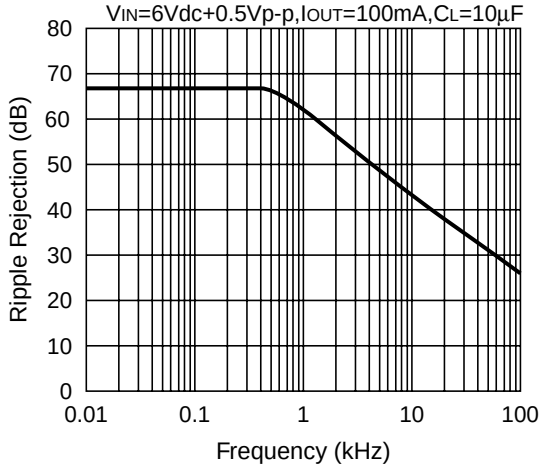

8) Line Transient Response (Topt=25°C)

RN5RF30A

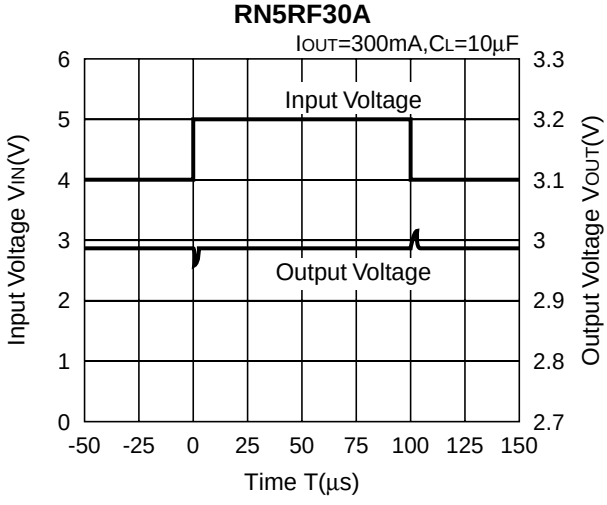

RN5RF50A

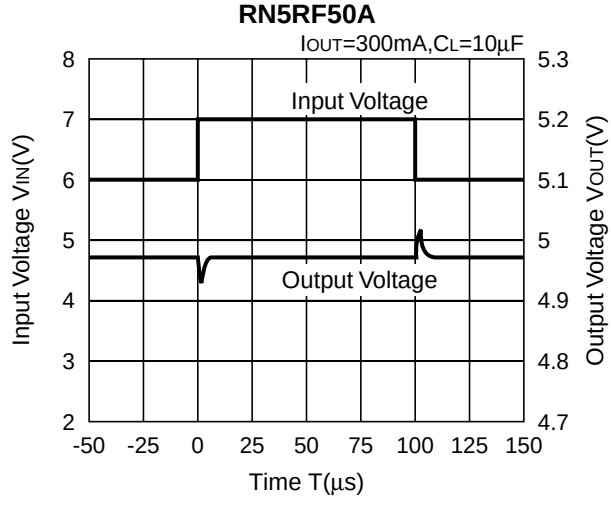

9) Load Transient Response (Topt=25°C)

RN5RF30A

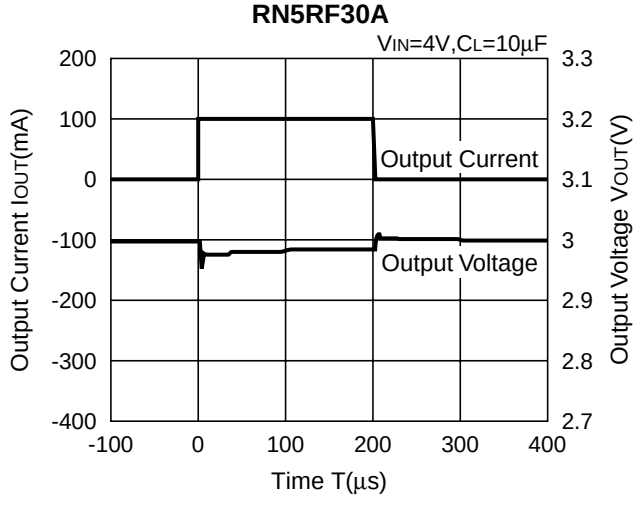

RN5RF50A

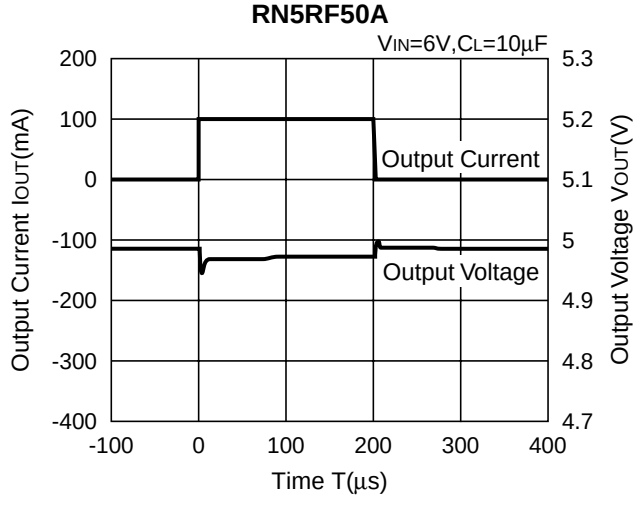

TYPICAL APPLICATION

