

RN1723 Development Board User's Guide

© 2015 Microchip Technology Inc.

Note the following details of the code protection feature on Microchip devices:

- Microchip products meet the specification contained in their particular Microchip Data Sheet.
- Microchip believes that its family of products is one of the most secure families of its kind on the market today, when used in the intended manner and under normal conditions.
- There are dishonest and possibly illegal methods used to breach the code protection feature. All of these methods, to our knowledge, require using the Microchip products in a manner outside the operating specifications contained in Microchip's Data Sheets. Most likely, the person doing so is engaged in theft of intellectual property.
- Microchip is willing to work with the customer who is concerned about the integrity of their code.
- Neither Microchip nor any other semiconductor manufacturer can guarantee the security of their code. Code protection does not mean that we are guaranteeing the product as "unbreakable."

Code protection is constantly evolving. We at Microchip are committed to continuously improving the code protection features of our products. Attempts to break Microchip's code protection feature may be a violation of the Digital Millennium Copyright Act. If such acts allow unauthorized access to your software or other copyrighted work, you may have a right to sue for relief under that Act.

Information contained in this publication regarding device applications and the like is provided only for your convenience and may be superseded by updates. It is your responsibility to ensure that your application meets with your specifications. MICROCHIP MAKES NO REPRESENTATIONS OR WARRANTIES OF ANY KIND WHETHER EXPRESS OR IMPLIED, WRITTEN OR ORAL, STATUTORY OR OTHERWISE, RELATED TO THE INFORMATION, INCLUDING BUT NOT LIMITED TO ITS CONDITION, QUALITY, PERFORMANCE, MERCHANTABILITY OR FITNESS FOR PURPOSE**.** Microchip disclaims all liability arising from this information and its use. Use of Microchip devices in life support and/or safety applications is entirely at the buyer's risk, and the buyer agrees to defend, indemnify and hold harmless Microchip from any and all damages, claims, suits, or expenses resulting from such use. No licenses are conveyed, implicitly or otherwise, under any Microchip intellectual property rights unless otherwise stated.

Trademarks

The Microchip name and logo, the Microchip logo, dsPIC, FlashFlex, flexPWR, JukeBlox, KEELOQ, KEELOQ logo, Kleer, LANCheck, MediaLB, MOST, MOST logo, MPLAB, OptoLyzer, PIC, PICSTART, PIC^{32} logo, RightTouch, SpyNIC, SST, SST Logo, SuperFlash and UNI/O are registered trademarks of Microchip Technology Incorporated in the U.S.A. and other countries.

The Embedded Control Solutions Company and mTouch are registered trademarks of Microchip Technology Incorporated in the U.S.A.

Analog-for-the-Digital Age, BodyCom, chipKIT, chipKIT logo, CodeGuard, dsPICDEM, dsPICDEM.net, ECAN, In-Circuit Serial Programming, ICSP, Inter-Chip Connectivity, KleerNet, KleerNet logo, MiWi, motorBench, MPASM, MPF, MPLAB Certified logo, MPLIB, MPLINK, MultiTRAK, NetDetach, Omniscient Code Generation, PICDEM, PICDEM.net, PICkit, PICtail, RightTouch logo, REAL ICE, SQI, Serial Quad I/O, Total Endurance, TSHARC, USBCheck, VariSense, ViewSpan, WiperLock, Wireless DNA, and ZENA are trademarks of Microchip Technology Incorporated in the U.S.A. and other countries.

SQTP is a service mark of Microchip Technology Incorporated in the U.S.A.

Silicon Storage Technology is a registered trademark of Microchip Technology Inc. in other countries.

GestIC is a registered trademark of Microchip Technology Germany II GmbH & Co. KG, a subsidiary of Microchip Technology Inc., in other countries.

All other trademarks mentioned herein are property of their respective companies.

© 2015, Microchip Technology Incorporated, Printed in the U.S.A., All Rights Reserved.

ISBN: 978-1-5224-0084-4

QUALITY MANAGEMENT SYSTEM
CERTIFIED BY DNV
== ISO/TS 16949 ==

Microchip received ISO/TS-16949:2009 certification for its worldwide headquarters, design and wafer fabrication facilities in Chandler and Tempe, Arizona; Gresham, Oregon and design centers in California and India. The Company's quality system processes and procedures are for its PIC® MCUs and dsPIC® DSCs, KEELOQ® code hopping devices, Serial EEPROMs, microperipherals, nonvolatile memory and analog products. In addition, Microchip's quality system for the design and manufacture of development systems is ISO 9001:2000 certified.

© 2015 Microchip Technology Inc.

Object of Declaration: RN1723 Development Board

EU Declaration of Conformity

Manufacturer: Microchip Technology Inc.
2355 W. Chandler Blvd.
Chandler, Arizona, 85224-6199
USA

This declaration of conformity is issued by the manufacturer.

The development/evaluation tool is designed to be used for research and development in a laboratory environment. This development/evaluation tool is not a Finished Appliance, nor is it intended for incorporation into Finished Appliances that are made commercially available as single functional units to end users under EU EMC Directive 2004/108/EC and as supported by the European Commission's Guide for the EMC Directive 2004/108/EC (8th February 2010).

This development/evaluation tool complies with EU RoHS2 Directive 2011/65/EU.

This development/evaluation tool, when incorporating wireless and radio-telecom functionality, is in compliance with the essential requirement and other relevant provisions of the R&TTE Directive 1999/5/EC and the FCC rules as stated in the declaration of conformity provided in the module datasheet and the module product page available at www.microchip.com.

For information regarding the exclusive, limited warranties applicable to Microchip products, please see Microchip's standard terms and conditions of sale, which are printed on our sales documentation and available at www.microchip.com.

Signed for and on behalf of Microchip Technology Inc. at Chandler, Arizona, USA

Derek Carlson
VP Development Tools

12-Sep-14
Date

NOTES:

© 2015 Microchip Technology Inc.

Table of Contents

Preface 7

Chapter 1. Introduction

1.1 Contents 13

1.2 Functionality and Features 13

Chapter 2. Hardware

2.1 Development Board Layout and Components 17

2.2 Hardware Features 20

Chapter 3. Initial Development Board Configuration

3.1 Setting up the Python™ Server 24

3.2 Setting up The RN1723 Embedded Client 28

3.3 Sample Terminal Output 32

3.4 Advanced Settings 33

Appendix A. RN1723 Development Board Schematics

Worldwide Sales and Service 42

© 2015 Microchip Technology Inc.

NOTES:

© 2015 Microchip Technology Inc.

Preface

NOTICE TO CUSTOMERS

All documentation becomes dated, and this manual is no exception. Microchip tools and documentation are constantly evolving to meet customer needs, so some actual dialogs and/or tool descriptions may differ from those in this document. Please refer to our web site (www.microchip.com) to obtain the latest documentation available.

Documents are identified with a "DS" number. This number is located on the bottom of each page, in front of the page number. The numbering convention for the DS number is "DSXXXXXXXXA", where "XXXXXXXX" is the document number and "A" is the revision level of the document.

For the most up-to-date information on development tools, see the MPLAB® IDE online help. Select the Help menu, and then Topics to open a list of available online help files.

INTRODUCTION

This chapter contains general information that will be useful to know before using the RN1723 Development Board. Items discussed in this chapter include:

- Document Layout
- Conventions Used in this Guide
- Recommended Reading
- The Microchip Web Site
- Development Systems Customer Change Notification Service
- Customer Support
- Document Revision History

DOCUMENT LAYOUT

This document describes how to use the RN1723 Development Board as a development tool to emulate and debug firmware on a target board. This document includes the following chapters:

- **Chapter 1. "Introduction"** provides an overview of the RN1723 Development Board, highlighting its features and uses.
- **Chapter 2. "Hardware"** provides an overview of the RN1723 Development Board hardware components and features.
- **Chapter 3. "Initial Development Board Configuration"** provides information on configuring the development board for first-time use, including setting up a web server.
- **Appendix A. "RN1723 Development Board Schematics"** provides schematic diagram information for the development board.

CONVENTIONS USED IN THIS GUIDE

This manual uses the following documentation conventions:

DOCUMENTATION CONVENTIONS

Description	Represents	Examples
Italic characters	Referenced books	*MPLAB® IDE User's Guide*
	Emphasized text	...is the *only* compiler...
Initial caps	A window	the Output window
	A dialog	the Settings dialog
	A menu selection	select Enable Programmer
Quotes	A field name in a window or dialog	"Save project before build"
Underlined, italic text with right angle bracket	A menu path	*File > Save*
Bold characters	A dialog button	Click **OK**
	A tab	Click the **Power** tab
Text in angle brackets < >	A key on the keyboard	Press <Enter>, <F1>
`Plain Courier New`	Sample source code	`#define START`
	Filenames	`autoexec.bat`
	File paths	`c:\mcc18\h`
	Keywords	`_asm, _endasm, static`
	Command-line options	`-Opa+, -Opa-`
	Bit values	`0, 1`
	Constants	`0xFF, 'A'`
`Italic Courier New`	A variable argument	*`file`*`.o`, where *`file`* can be any valid filename
Square brackets [ ]	Optional arguments	`mcc18 [options]` *`file`* `[options]`
Curly brackets and pipe character: { | }	Choice of mutually exclusive arguments; an OR selection	`errorlevel {0|1}`
Ellipses...	Replaces repeated text	`var_name [, var_name...]`
	Represents code supplied by user	`void main (void) { ... }`
Notes	A Note presents information that we want to re-emphasize, either to help you avoid a common pitfall or to make you aware of operating differences between some device family members. A Note can be in a box, or when used in a table or figure, it is located at the bottom of the table or figure.	**Note:** This is a standard note box. **CAUTION** **This is a caution note.** **Note 1:** This is a note used in a table.

© 2015 Microchip Technology Inc.

RECOMMENDED READING

The following documents are recommended as supplemental reference resources.

RN1723 Family Data Sheet (DS70005224)

Consult this document for detailed information on the RN4020 Bluetooth® Low Energy Module. Reference information found in this data sheet includes:

- Device pinout and packaging details
- Device electrical specifications
- List of features included on the device

WiFly Command Reference Manual (DS50002230)

This reference manual provides information on the commands and features for Microchip products that utilize the WiFly radio module command set. The WiFly radio module is a complete, stand-alone embedded wireless LAN access device. The device has an on-board TCP/IP stack and applications, and in the simplest hardware configuration, requires only four pins: Power, TX, RX, and Ground.

RN131/RN171/RN1723 Evaluation Kits User's Guide (DS50002183)

This user's guide describes the RN evaluation boards that are used for demonstrating the capabilities of the RN131, RN171, and RN1723 modules. These RN evaluation boards have the flexibility to connect directly to a PC or laptop through a standard USB interface or to embedded controllers through the serial UART interface. Reference information in this user's guide includes:

- Overview of the evaluation kit hardware and evaluation board features and components
- Hardware and module configuration
- Sensor interfaces and push button functions
- Evaluation board schematics

PICDEM™ PIC18 Explorer Demonstration Board User's Guide (DS51721)

This document describes how to use the PICDEM PIC18 Explorer Demonstration Board as a development tool to emulate and debug firmware on a target board. Reference information found in this user's guide includes:

- Functionality and features
- Hardware features
- Development board schematics

Explorer 16 Development Board User's Guide (DS50001589)

This document describes how to use the Explorer 16 Development Board as a development tool to emulate and debug firmware on a target board. Reference information found in this user's guide includes:

- Functionality and features
- Hardware features
- Development board schematics

These documents are available for download from the Microchip website (www.microchip.com).

THE MICROCHIP WEB SITE

Microchip provides online support via our web site at: http://www.microchip.com. This web site makes files and information easily available to customers. Accessible by most Internet browsers, the web site contains the following information:

- **Product Support** – Data sheets and errata, application notes and sample programs, design resources, user's guides and hardware support documents, latest software releases and archived software
- **General Technical Support** – Frequently Asked Questions (FAQs), technical support requests, online discussion groups, Microchip consultant program member listings
- **Business of Microchip** – Product selector and ordering guides, latest Microchip press releases, listings of seminars and events; and listings of Microchip sales offices, distributors and factory representatives

DEVELOPMENT SYSTEMS CUSTOMER CHANGE NOTIFICATION SERVICE

Microchip's customer notification service helps keep customers current on Microchip products. Subscribers will receive e-mail notification whenever there are changes, updates, revisions or errata related to a specified product family or development tool of interest.

To register, access the Microchip web site at www.microchip.com, click on Customer Change Notification and follow the registration instructions.

The Development Systems product group categories are:

- **Compilers** – The latest information on Microchip C compilers and other language tools
- **Emulators** – The latest information on the Microchip in-circuit emulator, MPLAB® REAL ICE™
- **In-Circuit Debuggers** – The latest information on the Microchip in-circuit debugger, MPLAB ICD 3
- **MPLAB X IDE** – The latest information on Microchip MPLAB X IDE, the Windows® Integrated Development Environment for development systems tools
- **Programmers** – The latest information on Microchip programmers including the PICkit™ 3 development programmer

CUSTOMER SUPPORT

Users of Microchip products can receive assistance through several channels:

- Distributor or Representative
- Local Sales Office
- Field Application Engineer (FAE)
- Technical Support

Customers should contact their distributor, representative or field application engineer (FAE) for support. Local sales offices are also available to help customers. A listing of sales offices and locations is included in the back of this document.

Technical support is available through the web site at: http://support.microchip.com

© 2015 Microchip Technology Inc.

DOCUMENT REVISION HISTORY

Revision A (December 2015)

This is the initial released version of this document.

NOTES:

© 2015 Microchip Technology Inc.

Chapter 1. Introduction

Thank you for purchasing the RN1723 Development Board from Microchip Technology Inc. The RN1723 Development Board provides a platform to evaluate Microchip's RN1723 module for low-power client applications. The RN-1723-LPCM kit comes with the RN1723 Development Board, which is preloaded with demonstration software that enables users to explore the features of the RN1723 IEEE 802.11 b/g Wi-Fi® module.

The development board is also expandable through a PICtail™ expansion interface that enables users to extend its functionality by adding various sensor/transceiver expansion boards.

The software package for this development board is available for download from the Microchip website at: www.microchip.com/wireless/RN1723DevBoard.

1.1 CONTENTS

The following are included with the purchase of the RN1723 Development Board:

- Two AA Batteries
- One male 1 x 6 connector header HDR-2.54 (J1)
- One USB cable (Type-A to mini-B)
- RN1723 Development Board Information Sheet

Note: If you are missing any of the contents listed, contact a Microchip sales office for assistance. A list of Microchip offices for sales and service is provided on the last page of this document.

1.2 FUNCTIONALITY AND FEATURES

One of the purposes of the RN1723 Development Board is to demonstrate to customers how the RN1723 module may be used in IoT applications. The RN1723 Development Board incorporates the main components and features that make connecting to and transmitting data to a Web-based server a straightforward process for designers.

Figure 1-1 shows a typical system diagram of how the RN1723 Development Board may be deployed in an Internet of Things (IoT) application. Following the diagram are descriptions of the roles of each of the major system components.

FIGURE 1-1: IoT APPLICATION SYSTEM DIAGRAM

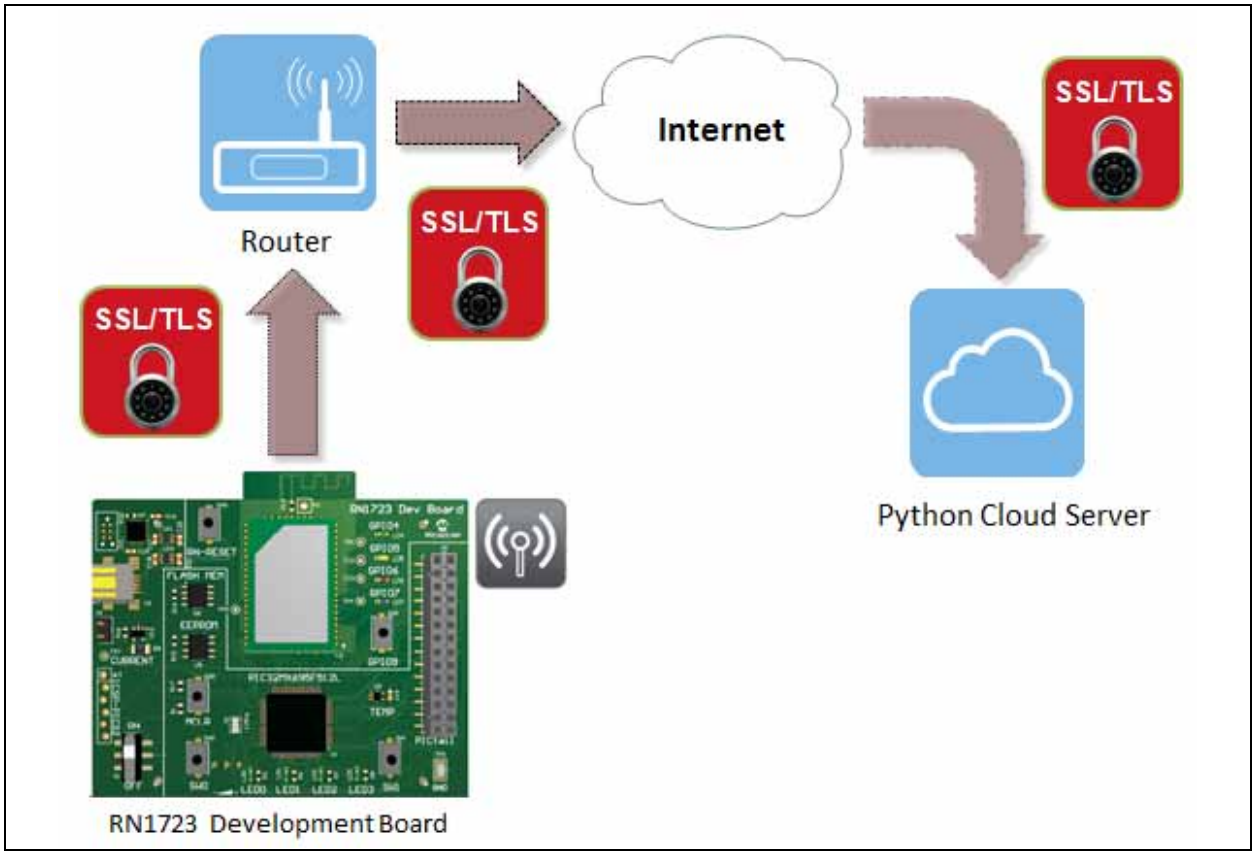

- The on-board RN1723 module provides the Wi-Fi connectivity capabilities. When associated to a Wi-Fi Access Point, a Wi-Fi network is formed, allowing the RN1723 module to transmit information to and from the cloud-based server.
- The PIC32 device on the board provides the means for customers to create their custom IoT client application. The firmware that manages the customer's specific application, such as a thermostat, a wearable device, or a door lock, resides within the PIC32 device. Additionally, Microchip provides the wolfSSL security suite in library form, which enables customers to provide a secure link between the RN1723 module and their remote server. This security suite is resident on the PIC32 device.

  The PIC32 device is also used to configure the RN1723 module, oversees its operation, captures data from external sensors, and passes that data, via the Wi-Fi module, up to the server. Similarly, the PIC32 device receives and processes data that is returned from the server via the RN1723 module.
- To assist with the development of an IoT application, a sample server written in Python is included as part of the RN1723 Development Board package. This server may be resident in the cloud or on a local computer.
- The RN1723 Development Board also contains a number of sensors:
  - Potentiometer
  - Temperature sensor
  - Switches and LEDs
  - Tilt-vibe sensor

  These components are used in a number of ways, including waking up the RN1723 module, indicating the module status, and providing the source of information that is transmitted to the server.

© 2015 Microchip Technology Inc.

1.2.1 Demonstration System

Now that the major system components have been identified, the following is a brief description of how the IoT client application provided with the RN1723 Development Board functions to make a complete demonstration system.

1. The RN1723 module and the PIC32 device are woken from sleep on a regular schedule. Initially it occurs once every 5 seconds; however, this interval may be changed by the user.
2. After waking up, the RN1723 module associates to the access point and opens a socket to the server. In parallel, the PIC32 device gathers data from the external sensors that are on the board (e.g., LEDs, switches, potentiometers, etc.). The PIC32 device packages this wake-up “status message” into JSON format and sends it the RN1723 module. The RN1723 then prepends the appropriate HTTP header information and sends it over the Internet to the server.
3. The server, after receiving the “status message”, has the option of asking the RN1723/PIC32 client device to perform additional tasks, or instructing the device to go back the sleep.
4. Regardless of the intervening actions, the final instruction from the server to the client is always to go back to sleep. During the time that the RN1723 module and the PIC32 device are asleep, the entire development board draws only 4 µA.

1.2.2 Additional Features

In addition to the hardware components, which are described in **Chapter 2. “Hardware”**, the RN1723 Development Board includes a sample IoT client firmware for the PIC32 device, a sample Python-based server, a UART device driver for the RN1723 module, as well as application code that demonstrates how to integrate the RN1723 module with the wolfSSL security suite.

In summary, the RN1723 Development Board is an excellent starting point for designers interested in developing and experimenting with the mechanics of creating an embedded IoT client device.

© 2015 Microchip Technology Inc.

NOTES:

© 2015 Microchip Technology Inc.

Chapter 2. Hardware

This chapter describes the hardware features of the RN1723 Development Board. The following topics are discussed:

- Development Board Layout and Components
- Hardware Features

2.1 DEVELOPMENT BOARD LAYOUT AND COMPONENTS

Representations of the layout for the RN1723 Development Board included in the kit are shown in Figure 2-1 and Figure 2-2.

The top assembly of the board includes these key features, as indicated in Figure 2-1.

1. RN1723 IEEE 802.11 b/g Wi-Fi Transceiver (U2).
2. PIC32MX695F512L 32-bit microcontroller (U1).
3. Power supply through USB/AA batteries (J3).
4. Eight LED status indicators (LED0-LED3, GPIO4-GPIO7).
5. Push buttons (MCLR, RN-RESET, GPIO9, SW0, SW1).
6. ON/OFF switch (S1).
7. 6-pin programming/debug port (J1).
8. PICtail expansion port (J6).
9. 256K SPI EEPROM (U5).
10. 1 MB SST Flash memory (U6).
11. PIC16F1455 8-bit microcontroller; USB-UART converter (U7).
12. MCP9700A temperature sensor (U9).
13. PIC32 device power control jumper (J4).

© 2015 Microchip Technology Inc.

FIGURE 2-1: RN1723 DEVELOPMENT BOARD (TOP LAYOUT)

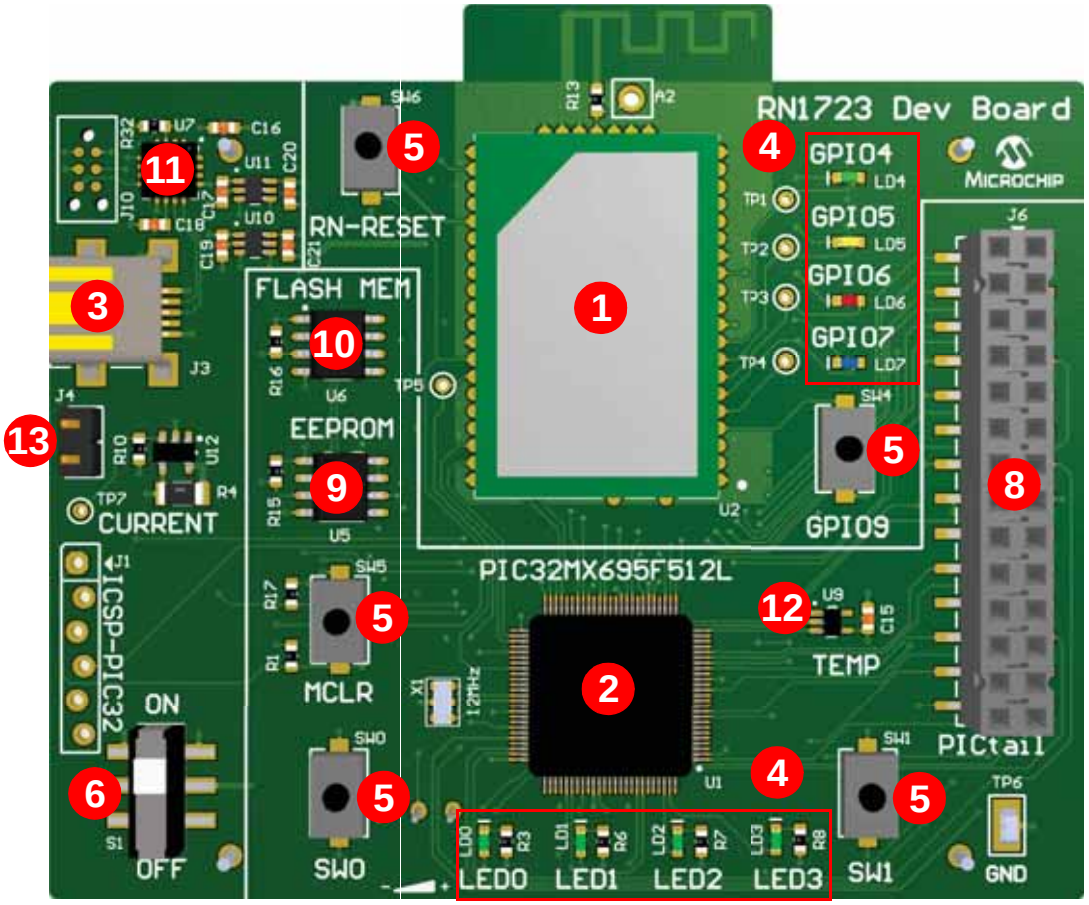

© 2015 Microchip Technology Inc.

The bottom assembly of the board includes these key features, as indicated in Figure 2-2.

1. Tilt/Vibe sensor.
2. Potentiometer.
3. Magnetic reed sensor (SW2).
4. AA battery receptacle (BT1, BT2).

FIGURE 2-2: RN1723 DEVELOPMENT BOARD (BOTTOM LAYOUT)



2.2 HARDWARE FEATURES

This section provides detailed descriptions of the following key features of the development board. Refer to Figure 2-1 and Figure 2-2 for their physical layout locations.

2.2.1 RN1723 IEEE 802.11 b/g Wi-Fi Transceiver Module

The RN1723 IEEE 802.11 b/g Wi-Fi Transceiver Module provides wireless connectivity to the development board. Host communication is through the UART of the PIC32MX695F512L microcontroller on the board.

2.2.2 Processor Support

The RN1723 Development Board is designed with a permanently mounted (i.e., soldered) PIC32MX695F512L microcontroller.

2.2.3 Power Supply

The development board can be powered by two AA batteries or through the USB cable. The battery voltage is monitored and boosted by the MCP1642 Synchronous Boost Regulator.

2.2.4 LEDs

There are two sets of LEDs on the board. The four green LEDs, LED0-LED3, are connected to the PORTE pins of the PIC32 microcontroller. To turn on the LEDs, the port pins need to be set High.

LEDs GPIO 4-GPIO7 are connected to the RN1723 module as I/Os to the module. Their individual functions are defined in Table 2-1.

TABLE 2-1: GPIO4-GPIO7 FUNCTIONS

Pin Name	LED Color	Function
GPIO4	Green	Goes High after the RN1723 module has associated/authenticated and has a valid IP address.
GPIO5	Yellow	Set this pin High to trigger a TCP connection or Low to disconnect.
GPIO6	Red	This pin asserts High when a socket is open, and Low when a socket is closed.
GPIO7	Blue	This pin asserts High when a client connects to WEB_APP to configure the WiFly module.

2.2.5 Switches

The RN1723 Development Board has the following switches:

- ON/OFF – This slider controls the main power to the board. To turn on power to the board, move the S1 slider to the ON position
- SW0 – This active-low push button switch is connected to RD4 of the PIC32 microcontroller
- SW1 – This active-low push button switch is connected to RD13 of the PIC32 microcontroller
- MCLR – This active-low push button switch can be used to reset the PIC32 microcontroller
- RN-RESET – This active-low push button switch is connected to the RESET pin of the RN1723 module
- GPIO9 – This active-low push button switch is connected to the GPIO9 pin of the RN1723 module

© 2015 Microchip Technology Inc.

2.2.6 Programming/Debug Port

Connector J1 provides access to the PIC32 microcontroller's debug pins. It is used to program or re-flash the development board with new firmware.

2.2.7 PICtail Expansion Port

Connector J6 provides access to the PIC32 microcontroller's spare I/O pins. These pins can function as general purpose I/O ports or as an SPI, I^2C, or UART interface to an external circuit.

2.2.8 EEPROM (25LC256)

The development board has a 256K SPI Bus Serial EEPROM for storing and retrieving network or application-specific information, which is connected to SPI4 of the PIC32 microcontroller.

2.2.9 Flash Memory (SST25VF080B)

This device features an 8-Mbit SPI Serial Flash for over-the-air firmware updates of the 32-bit microcontroller, which is connected to SPI4 of the PIC32 microcontroller.

2.2.10 PIC16F1455 (USB-to-UART converter)

The PIC16F1455 8-bit microcontroller translates the USB over UART on U3 of the PIC32 microcontroller.

2.2.11 MCP9700 Temperature Sensor

The temperature sensor (MCP9700A) is a low-power linear active thermistor IC. To minimize power consumption, the sensor is powered from a port pin. On power-up, the sensor output can be measured after one minute. The internal Analog-to-Digital Converter (ADC) of the microcontroller can be used to measure the temperature value.

2.2.12 PIC32 Device Power Control Jumper (J4)

If the jumper on J4 is installed, the PIC32 microcontroller will always be powered on. If the jumper is not installed the operational state of the RN1723 module determines whether the 32-bit microcontroller is on or off. This enables a user to test the power consumption of the low-power client. To measure the power consumption, a test point, TP7, is provided.

The application can be used to construct a sleep profile for the sleep wake cycle of the RN1723 module. For more information about putting the RN1723 module to sleep, refer to the *"WiFly Command Reference Manual"* (DS50002230). Table 2-2 lists the RN1723 module modes and the PIC32 MCU states depending on the jumper position.

TABLE 2-2: JUMPER STATE DEFINITIONS

Jumper Position	RN1723 Module Mode	PIC32MZ695F512L MCU State
Installed	Awake	Powered on
Installed	Asleep	Powered on
Not installed	Awake	Powered on
Not installed	Asleep	Powered off

2.2.13 Tilt/Vibe sensor

The Tilt/Vibe sensor is connected directly to the RN1723 module through the SENSOR3 pin and may be used to wake the module on motion detection.

© 2015 Microchip Technology Inc.

2.2.14 Potentiometer

The potentiometer is connected to the PIC32 microcontroller on analog pin AN2/RB2 to demonstrate how to connect an analog input sensor.

2.2.15 Magnetic/Reed Sensor

The Magnetic/Reed sensor is connected directly to the RN1723 module via the SNSOR0 pin and can also be used to wake the RN1723 module. However, on the current version of the development board, this IC is not populated. If this functionality is desired, it is up to the user to add this component to the development board. Refer to the schematics and bill of materials for details.

© 2015 Microchip Technology Inc.

Chapter 3. Initial Development Board Configuration

This chapter describes how the configure the development board to communicate with a server. The following topics are included:

- Setting up the Python™ Server
- Setting up The RN1723 Embedded Client
- Sample Terminal Output
- Advanced Settings

Out of the box, the demonstration for the RN1723 Development Board uses a python script to set up a laptop/PC as a host. Customers can use this platform to develop and test their embedded client application prior to setting up a production cloud-based hosting service.

Figure 3-1 provides a top-level diagram detailing the objective of the system operation.

FIGURE 3-1: TOP-LEVEL SYSTEM OPERATION DIAGRAM

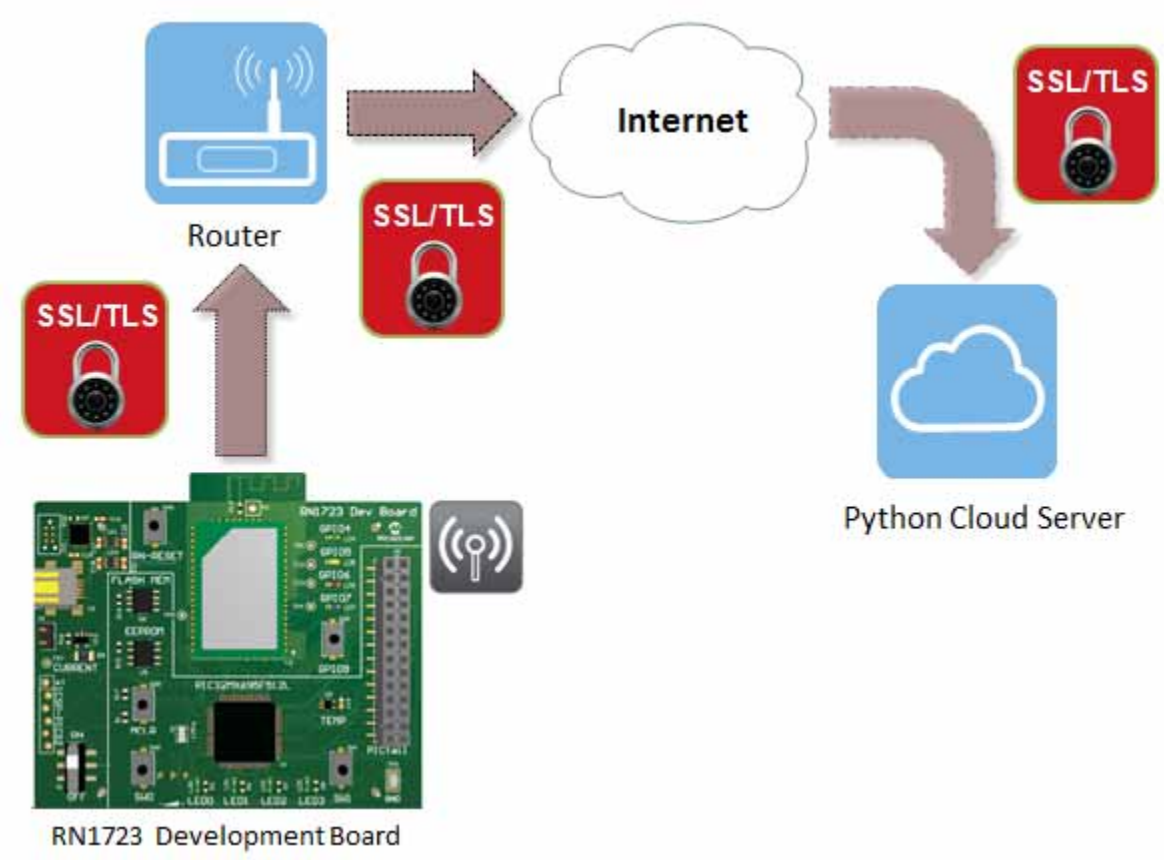

3.1 SETTING UP THE PYTHON™ SERVER

To set up the Python server, users will need to install `python` and the necessary packages that support SSL before launching the server script. After the server is set up and running properly, the RN1723 Development Board will be able to connect to the server as a client and post the system updates to the server.

The following sections describe the necessary steps to set up a computer as a server for Windows®, Mac OS®, and Linux.

3.1.1 Setting Up the Python Server for Windows 7

To set up the Python server for Windows 7, do the following:

1. Install `python`, version 2.7.10 or later.
   a) Download and run the installer from:
      https://www.python.org/downloads/release/python-2710/
   b) Add the Python directory to your system PATH.

Note:	The `pip` package will be installed with Python 2.7 or later.

2. Install `pybottle` by opening a command shell (click Start () and enter `cmd` in the search box) and entering the following command:

   ```
   python –m pip install bottle
   ```

3. Install `CherryPy`, version 3.2.3 by entering the following command:

   ```
   python –m pip install cherrypy==3.2.3
   ```

4. Launch the server script from the installed directory by entering the following command:

   ```
   python ServerMainSSL.py
   ```

3.1.2 Setting Up a Python Server for Mac OS

The instructions provided in this section assume that a previous version of `openssl` has not been installed. If that is not the case, all previous versions must first be uninstalled before proceeding.

Only `openssl` version 1.0.0 or later supports the RN1723 Secure Server Script using TLS1.2. To install `openssl`, do the following:

1. Use `Homebrew` (http://brew.sh) to install the latest version of `openssl` using the following commands in a terminal window, while forcing the links so that Python will use the right version of `openssl`.

   ```
   brew update
   brew install openssl
   brew link --force openssl
   ```

2. Reinstall Python to use the latest openssl.

   ```
   brew install python --with-brewed-openssl
   ```

3. To verify that python was updated, run the following command and verify that the version number of the operating system is greater than 1.0.2d.

   ```
   python -c 'import ssl; print ssl.OPENSSL_VERSION'
   ```

4. Install `pip` by opening a terminal application (*Applications* > *Utilities* > *Terminal*) and entering the following command:.

   ```
   $ sudo easy_install pip
   ```


© 2015 Microchip Technology Inc.

5. Install `pybottle` by entering the following command:

   ```
   $ sudo pip install bottle
   ```

6. Install `Cherrypy` version 3.2.3 by entering the following command:

   ```
   $ sudo pip install cherrypy==3.2.3
   ```

7. Launch the server script by entering the following command:

   ```
   $ sudo python ServerMain.py
   ```

3.1.3 Setting Up a Python Server for Linux

1. Install `Python` 2.7.x by opening a terminal application and entering the following command:

   ```
   $ sudo apt-get install python
   ```

2. Install `pip` by entering the following command:

   ```
   $ sudo apt-get install python-pip
   ```

3. Install `pybottle` by entering the following command:

   ```
   $ sudo pip install bottle
   ```

4. Install `Cherrypy` version 3.2.3 by entering the following command:

   ```
   $ sudo pip install cherrypy==3.2.3
   ```

5. Launch the server script by entering the following command:

   ```
   $ sudo python ServerMain.py
   ```

© 2015 Microchip Technology Inc.

3.1.4 Reading the Server IP Address

After the server is set up on a host PC/laptop, please read the IP address of the laptop/PC using the command `ipconfig` (Windows) or `ifconfig` (Mac/Linux). Figure 3-2 shows a sample screen.

While setting up the RN1723 Client, the host address is required to be set according to the output of `ifconfig`/`ipconfig` (e.g., 192.168.1.111). It is important to ensure that both the client and server are on the same subnet.

FIGURE 3-2: `ifconfig` EXAMPLE

```
Last login: Fri Dec 11 13:58:49 on ttys000
CHN-MLT-C13839:~ c13839$ ifconfig
lo0: flags=8049<UP,LOOPBACK,RUNNING,MULTICAST> mtu 16384
        options=3<RXCSUM,TXCSUM>
        inet6 ::1 prefixlen 128
        inet 127.0.0.1 netmask 0xff000000
        inet6 fe80::1%lo0 prefixlen 64 scopeid 0x1
        nd6 options=1<PERFORMNUD>
gif0: flags=8010<POINTOPOINT,MULTICAST> mtu 1280
stf0: flags=0<> mtu 1280
en0: flags=8863<UP,BROADCAST,SMART,RUNNING,SIMPLEX,MULTICAST> mtu 1500
        options=10b<RXCSUM,TXCSUM,VLAN_HWTAGGING,AV>
        ether 10:dd:b1:e3:17:38
        inet6 fe80::12dd:b1ff:fee3:1738%en0 prefixlen 64 scopeid 0x4
        inet 192.168.1.111 netmask 0xffffff00 broadcast 192.168.1.255
        nd6 options=1<PERFORMNUD>
        media: autoselect (100baseTX <full-duplex,flow-control>)
        status: active
en1: flags=8823<UP,BROADCAST,SMART,SIMPLEX,MULTICAST> mtu 1500
        ether a8:bb:cf:01:26:7e
        nd6 options=1<PERFORMNUD>
        media: autoselect (<unknown type>)
        status: inactive
fw0: flags=8863<UP,BROADCAST,SMART,RUNNING,SIMPLEX,MULTICAST> mtu 4078
        lladdr 44:fb:42:ff:fe:76:e5:3a
        nd6 options=1<PERFORMNUD>
        media: autoselect <full-duplex>
        status: inactive
en3: flags=8963<UP,BROADCAST,SMART,RUNNING,PROMISC,SIMPLEX,MULTICAST> mtu 1500
        options=60<TSO4,TSO6>
        ether d2:00:17:6e:53:a0
        media: autoselect <full-duplex>
        status: inactive
p2p0: flags=8802<BROADCAST,SIMPLEX,MULTICAST> mtu 2304
        ether 0a:bb:cf:01:26:7e
        media: autoselect
        status: inactive
bridge0: flags=8863<UP,BROADCAST,SMART,RUNNING,SIMPLEX,MULTICAST> mtu 1500
        options=63<RXCSUM,TXCSUM,TSO4,TSO6>
        ether 12:dd:b1:3e:49:00
        Configuration:
                id 0:0:0:0:0:0 priority 0 hellotime 0 fwddelay 0
                maxage 0 holdcnt 0 proto stp maxaddr 100 timeout 1200
                root id 0:0:0:0:0:0 priority 0 ifcost 0 port 0
                ipfilter disabled flags 0x2
        member: en3 flags=3<LEARNING,DISCOVER>
                ifmaxaddr 0 port 7 priority 0 path cost 0
        nd6 options=1<PERFORMNUD>
        media: <unknown type>
        status: inactive
CHN-MLT-C13839:~ c13839$
```


© 2015 Microchip Technology Inc.

3.1.5 Opening the Server Web Page

Open a Web browser and enter the following URL: https://localhost.

FIGURE 3-3: SERVER WEB PAGE EXAMPLE

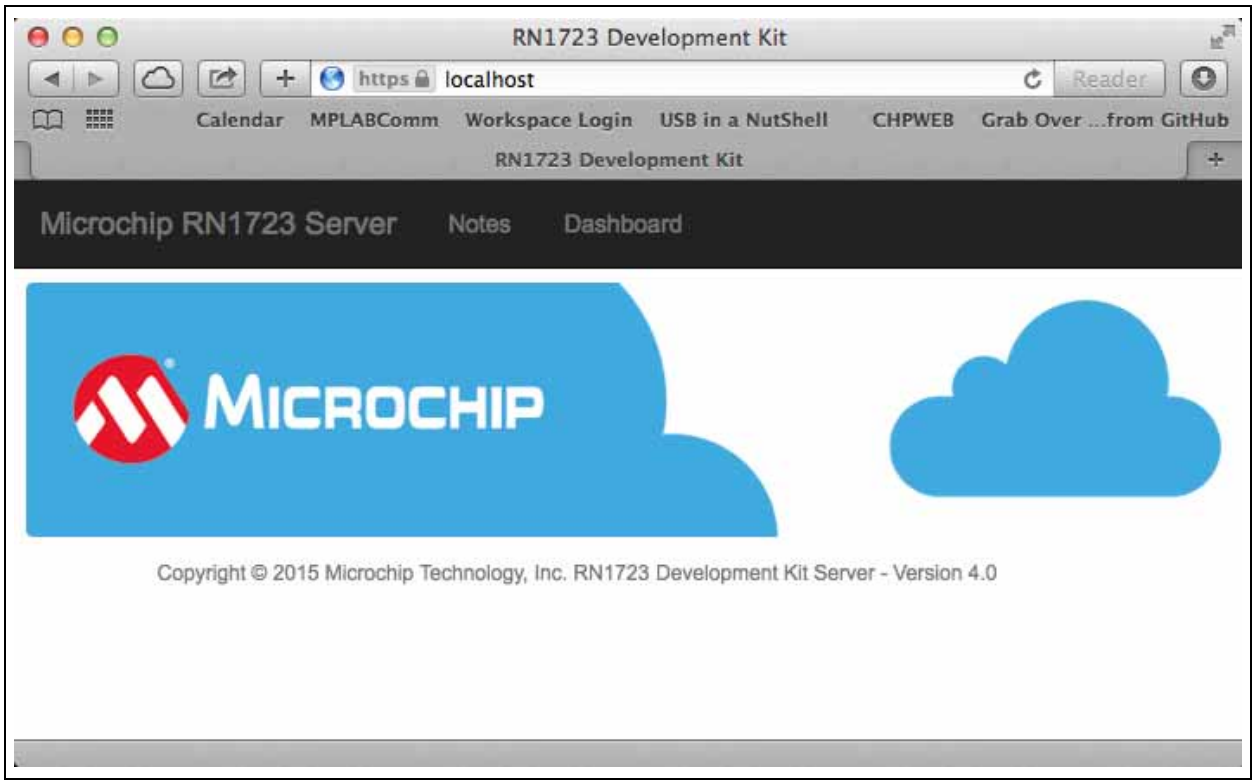

3.2 SETTING UP THE RN1723 EMBEDDED CLIENT

3.2.1 Provisioning the RN1723 Development Board Using a Serial Port Terminal Application

1. Connect a mini-USB to Type A USB cable between the RN1723 Development Board and the laptop/PC.
2. Use a serial port terminal emulator and configure it to the following settings:
   - Baud Rate: 115200
   - Data bits: 8
   - Parity: None
   - Stop bits: 1
   - Flow Control: None
3. Ensure that the jumper is installed on J4.
4. Press any key to display the main menu in the terminal application, as shown in Figure 3-4.

FIGURE 3-4: TERMINAL APPLICATION MENU

```
Choose from the below options:
---------------------------------------
a. Configure PIC32 to RN-UART BAUDRATE
b. Pass Terminal to RN-UART
c. Factory Reset System

1. Restore RN1723 Dev Board Default Settings
2. Scan for networks to join
3. Configure SSID, Passphrase
4. Change DNS Name
5. Change Host IP Address
6. Change Destination port
7. Change RN SYS Wake time
8. Change RN1723 Dev Board Base-URI
9. Enter Date and Time (Used for SSL Peer Validation)

Press 'ESC' to exit PIC32 Console Mode
>>
```


© 2015 Microchip Technology Inc.

5. Select option 5 and configure the host server address. When prompted “Enter Host IP Address”, enter the IP address of the host. For example, 192.168.1.27. The message “Programming host IP...” followed by “CMD” will appear indicating the IP address has been programmed. As shown in Figure 3-5, all commands entered by the user are shown in **bold** type. If a user command is successfully executed, the “OK” response is returned from the RN1723 module.

FIGURE 3-5: SETTING THE HOST SERVER ADDRESS

```
Press ‘ESC’ to exit PIC32 Console Mode
>>
5

Enter Host IP Address

192.168.1.27

Programming host IP...
CMD

<1.00>
set ip host 192.168.1.127

OK
<1.00>
set dns name 0

OK
<1.00>
save

Storing in config
<1.00>
exit
>>
```

6. Select option 3, enter the SSID, and then the Passphrase of the AP to which the RN1723 Development Board is to be connected. As shown in Figure 3-6, all commands entered by the user are shown in **bold** type. If a user command is successfully executed, the "OK" response is returned from the RN1723 module.

FIGURE 3-6: SETTING THE SSID AND PASSPHRASE

```
>>
3

Enter SSID

roving1

Programming SSID...
CMD

<1.00>
set wlan ssid roving1

OK
<1.00>
save

Storing in config
<1.00>
exit
Enter Passphrase

>>
rubygirl

Programming Passphrase...
CMD

<1.00>
set wlan pass rubygirl

OK
<1.00>
```

Note: The 32-bit microcontroller will not be powered off during the RN1723 sleep cycle if the jumper is installed at position J4. Remove the jumper if you want to evaluate low power operation.

After provisioning the RN1723 Development Board onto a network, the device will communicate periodically to the host server (Cloud) with status information. Once the data exchange is completed, the RN module will return to Sleep mode.

For configuring the application system settings (wake-up interval, alarm thresholds), the user can modify the settings on the server web page.

© 2015 Microchip Technology Inc.

3.2.1.1 SERVER WEB PAGE

The URL to the server web page is:

https://<host server IP address>/RN1723/App1/v1/MAC Address/control

where, <host server IP address> is the IP address of your host server.

Figure 3-7 show the device status information available on the web page once the device starts communicating with the host server.

FIGURE 3-7: DEVICE STATUS INFORMATION

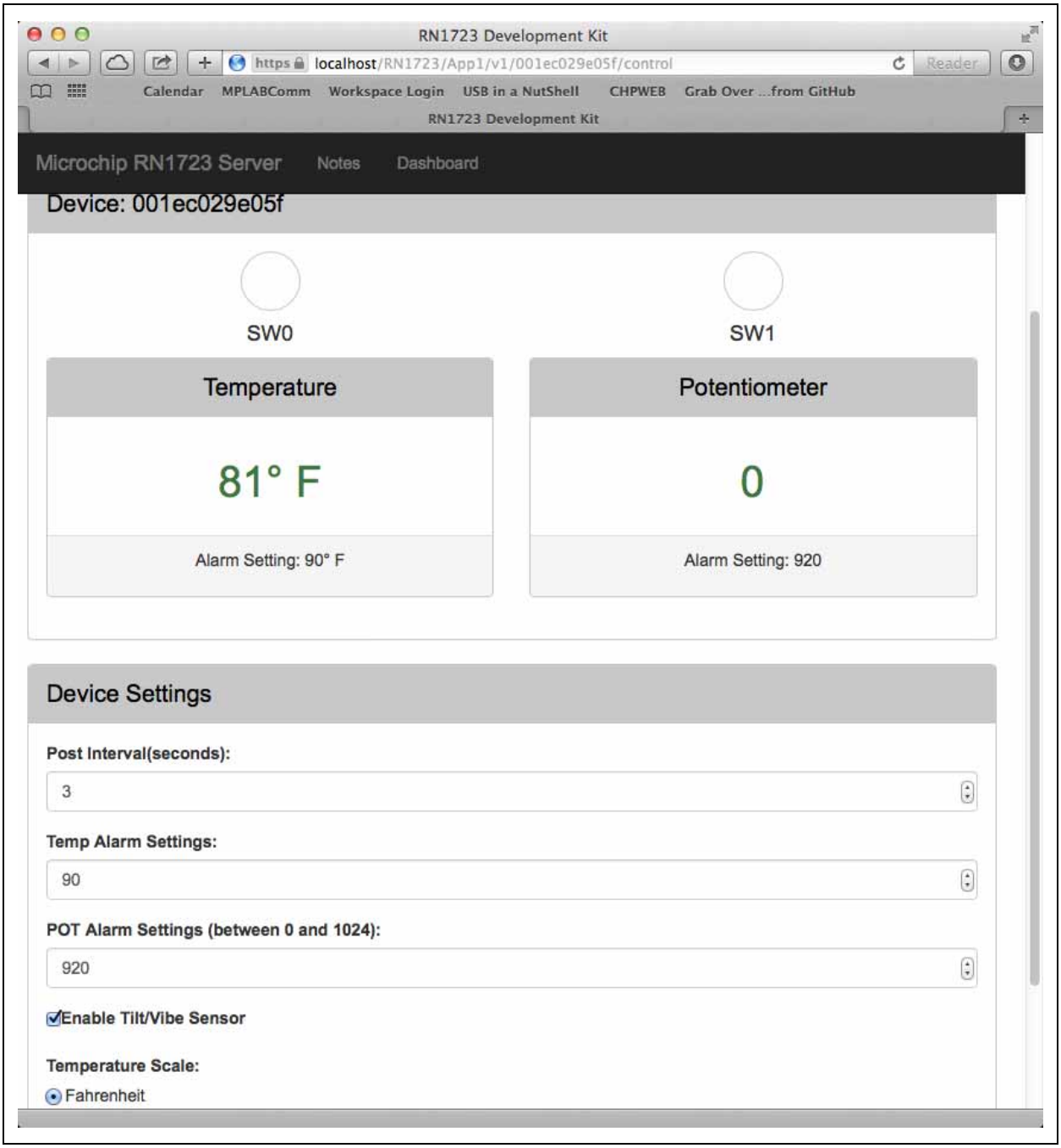

3.3 SAMPLE TERMINAL OUTPUT

Case 1: *Wakeup > Put/Post STATUS >Server 303 See Other > Get SYSTEM > Server 200 OK > Sleep*

```
Post to server-
PUT /RN1723/App1/v1/0006666dea2d/status HTTP/1.1
Host: lpc1.cloud.microchip.com
Accept: application/json
Connection: keep-alive
Content-Type: application/json
Content-Length: 111
{"msgHeader": {"uuid": "0006666dea2d"},"status": {"potvalue": 500,"temperature": 75,"switches":
3,"alarms": 3}}

Response from server-
HTTP/1.1 303 See Other
Content-Length: 128
Content-Type: application/json
Date: Thu, 02 Jul 2015 16:52:47 GMT
Server: ip-10-0-0-71
{"_links": {"self": {"href": "/0006666dea2d"}, "next": {"href": "/0006666dea2d/system"}},
"msgHeader": {"uuid": "0006666dea2d"}}

Post to server-
GET /RN1723/App1/v1/0006666dea2d/system HTTP/1.1
Host: lpc1.cloud.microchip.com
Accept: application/json
Connection: keep-alive
Content-Type: application/json
Content-Length: 0

Response from server-
HTTP/1.1 200 OK
Content-Length: 188
Content-Type: application/json
Date: Thu, 02 Jul 2015 16:52:48 GMT
Server: ip-10-0-0-71
{"_links": {"self": {"href": "/0006666dea2d"}}, "msgHeader": {"uuid": "0006666dea2d"},
"system": {"tiltVibe": true, "temperatureThreshold": 72, "publishPeriod": 4, "potMaxThreshold":
400}}

Successfully communicated to host.
RN going to sleep
```

Case 2: *Wakeup > Put/Post STATUS > Server 200 OK > Sleep*

```
RN with CyaSSL Demo Version: 1.00
Build Date: Jul  1 2015 15:07:18
Post to server-
PUT /RN1723/App1/v1/0006666dea2d/status HTTP/1.1
Host: lpc1.cloud.microchip.com
Accept: application/json
Connection: keep-alive
Content-Type: application/json
Content-Length: 111
{"msgHeader": {"uuid": "0006666dea2d"},"status": {"potvalue": 500,"temperature": 76,"switches":
3,"alarms": 3}}

Response from server-
HTTP/1.1 200 OK
Content-Length: 86
Content-Type: application/json
Date: Thu, 02 Jul 2015 16:52:54 GMT
Server: ip-10-0-0-71
{"_links": {"self": {"href": "/0006666dea2d"}}, "msgHeader": {"uuid": "0006666dea2d"}}

Successfully communicated to host.
RN going to sleep
```


© 2015 Microchip Technology Inc.

3.4 ADVANCED SETTINGS

The following are the default settings used by the demonstration application:

- Wake-up Interval: 15 seconds
- Remote port: 443
- Baud rate (RN Module): 115200
- Module Base URI: /RN1723/App1/v1

To modify any of the default settings, the user may use the available menu options listed in Table 3-1.

3.4.1 Terminal (Console) Application Menu Options

The available console application menu options are listed in Table 3-1.

TABLE 3-1: TERMINAL (CONSOLE) APPLICATION MENU OPTIONS

Option	Feature	Description
a	Configure PIC32 to the RN-UART's BAUDRATE	Enables the user the configure the baud rate for the RN1723 module.
b	Pass terminal to RN-UART	In this mode, the user can configure the RN1723 module using the WiFly commands.
c	Factory Reset System	Resets the RN1723 to its factory defaults. Refer to the *"WiFly Command Reference Manual"* (DS500002230) for the factory default settings of the RN1723 module.
1	Restore RN1723 Demo Default Settings	Programs the RN1723 module with the default settings for the application demonstration.
2	Scan for Networks to Join	Performs a scan operation and outputs the results on the terminal.
3	Configure SSID and Passphrase	Allows the user to provision the RN1723 module onto a network.
4	Change DNS Name	Allows the user to configure the host using DNS or an IP address. If using DNS, the host IP address will be set to 0.
5	Change Host IP Address	Allows the user to configure the host IP address when the DNS name is not available.
6	Change Destination Port	The default destination port is 443 (SSL); however, the user can modify the default port using this option.
7	Change RN SYS Wake Time	The default wake time is set to 15 seconds. Users can modify the value using this option and the RN1723 Development Board will use the new value to sleep and wake-up.
8	Change LCPM Base-URI	The Base-URI is the URL for the server. Based on the requirement or changes in the server, this URL can be modified in the application.
9	Enter Date and Time	The date and time are used for the SSL Peer Validation (certificate). This option enables the user to manually enter the date and time that is used in the SSL certificate validation. RN1723 supports NTP (Network Time Protocol) and customers can also use this feature. Using the NTP for network time and date is not available in the application; in order to do this, users need to customize their client application

NOTES:

© 2015 Microchip Technology Inc.

Appendix A. RN1723 Development Board Schematics

This appendix provides the schematic diagrams for the RN1723 Development Board and includes the following figures:

- **Figure A-1: "RN1723 Module"**
- **Figure A-2: "Device"**
- **Figure A-3: "UART Level Translator/Isolation"**
- **Figure A-4: "USB to PIC32 Serial"**
- **Figure A-5: "Flash Device"**
- **Figure A-6: "Power Supply"**
- **Figure A-7: "EEPROM"**
- **Figure A-8: "PICtail™ connector and debug port connector"**
- **Figure A-9: "LEDs and Switches"**
- **Figure A-10: "GPIO"**
- **Figure A-11: "Potentiometer"**
- **Figure A-12: "ISP Header"**
- **Figure A-13: "Boost Regulator"**
- **Figure A-14: "Test Points"**

FIGURE A-1: RN1723 MODULE

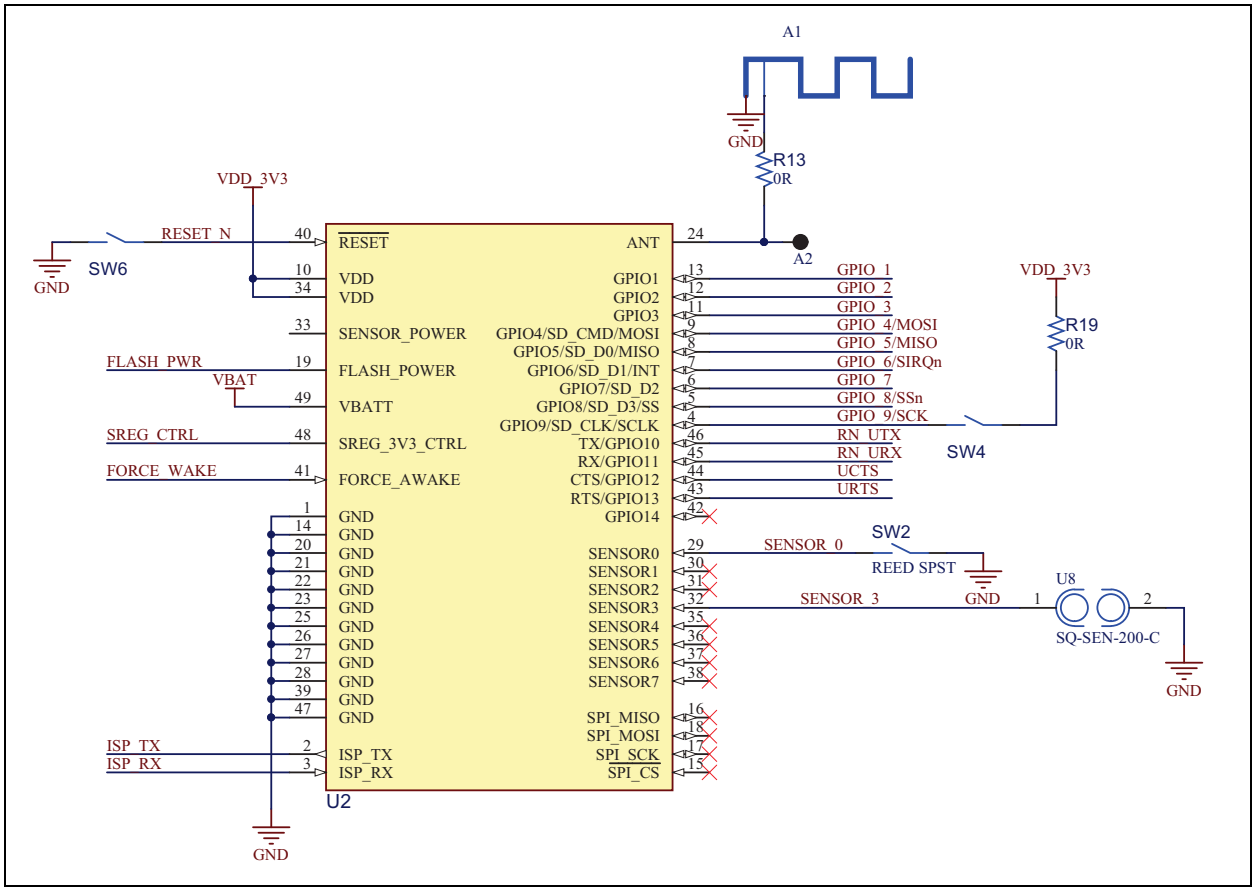

FIGURE A-2: DEVICE

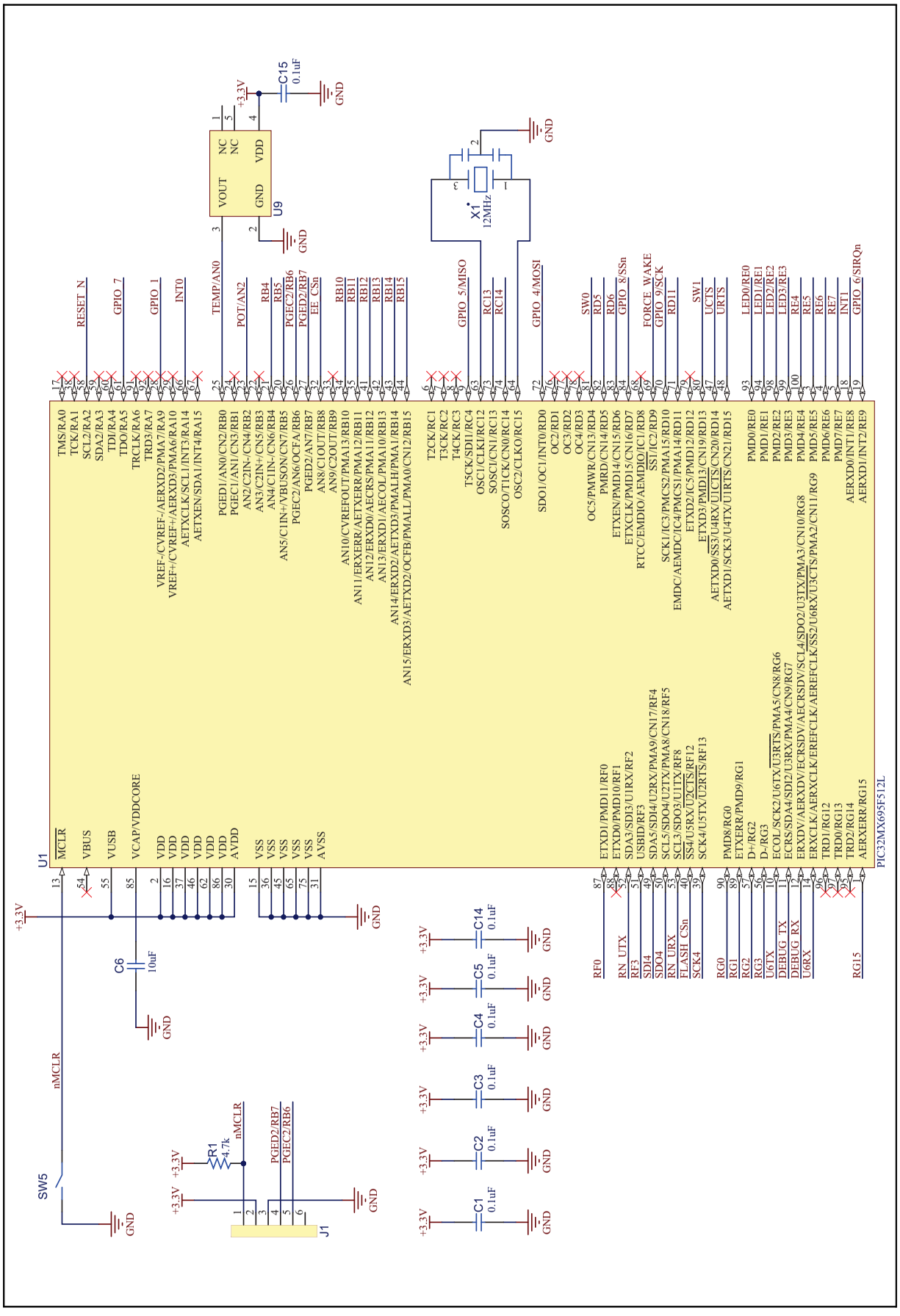

© 2015 Microchip Technology Inc.

FIGURE A-3: UART LEVEL TRANSLATOR/ISOLATION

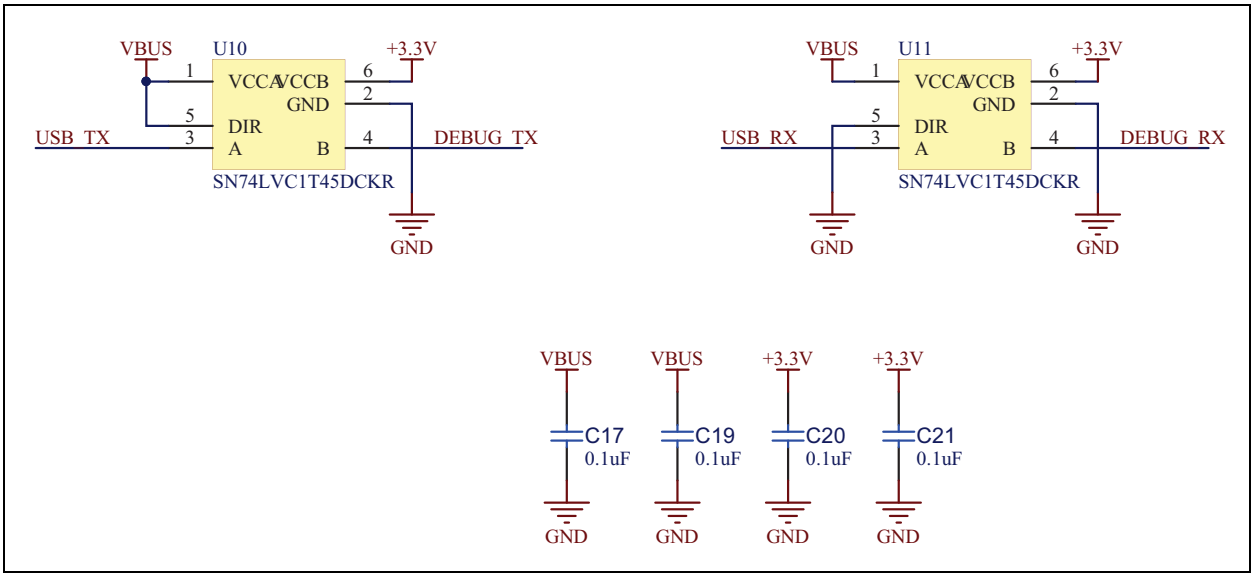

FIGURE A-4: USB TO PIC32 SERIAL

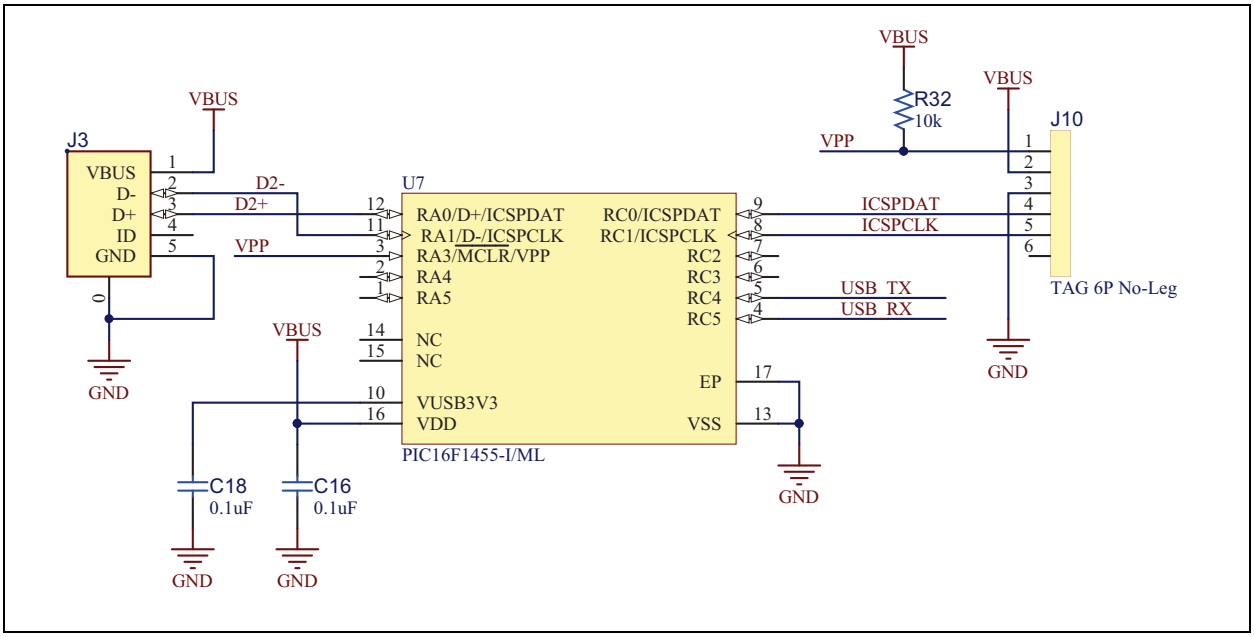

FIGURE A-5: FLASH DEVICE

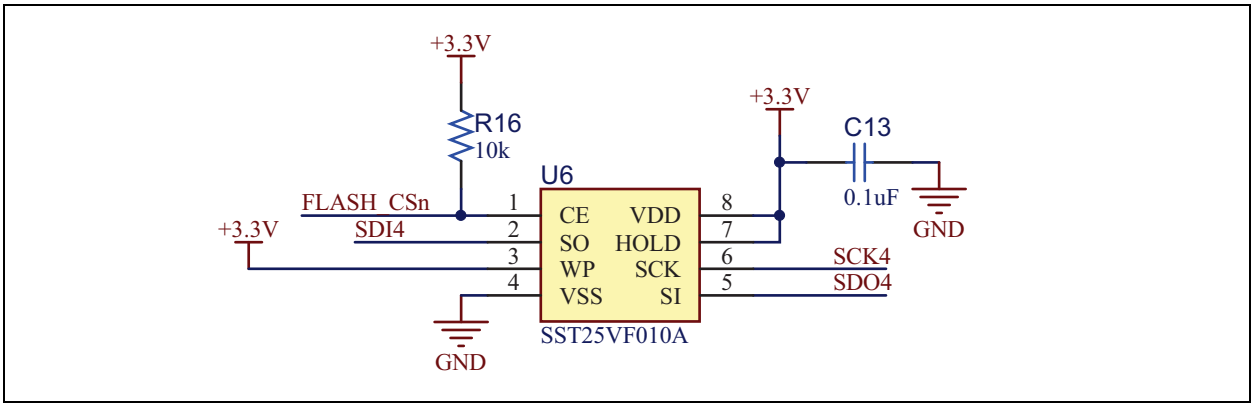

FIGURE A-6: POWER SUPPLY

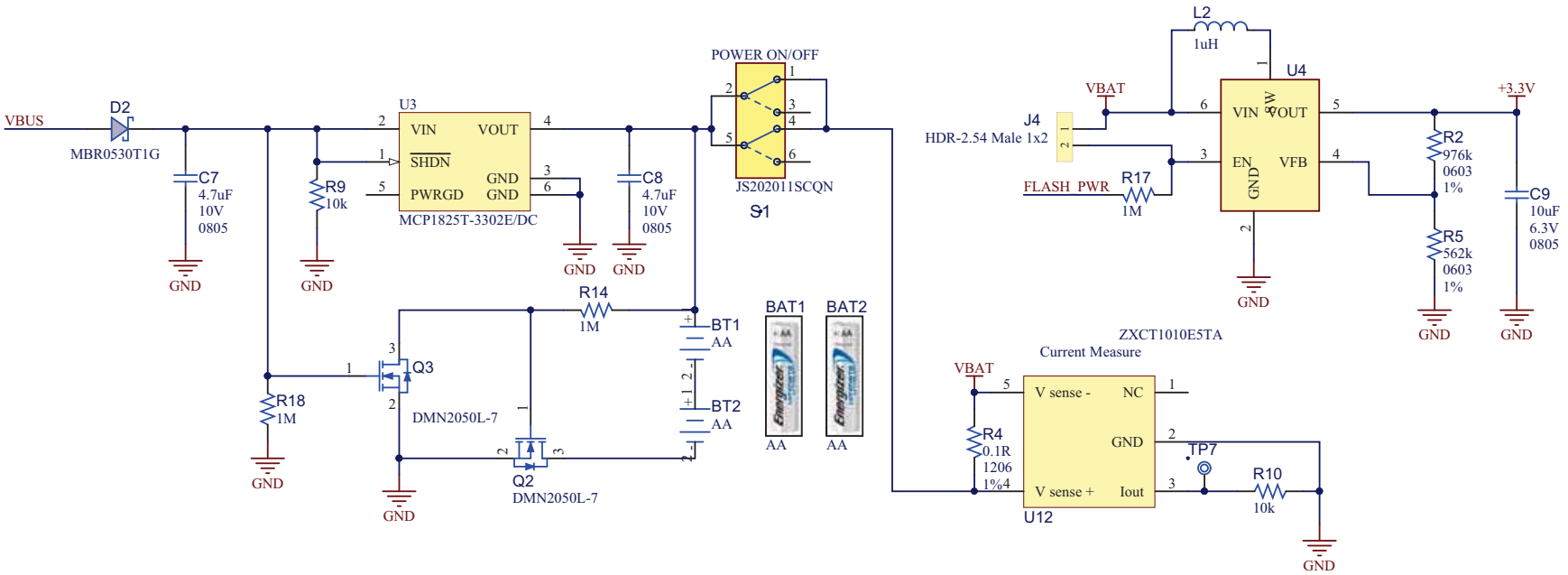

FIGURE A-7: EEPROM

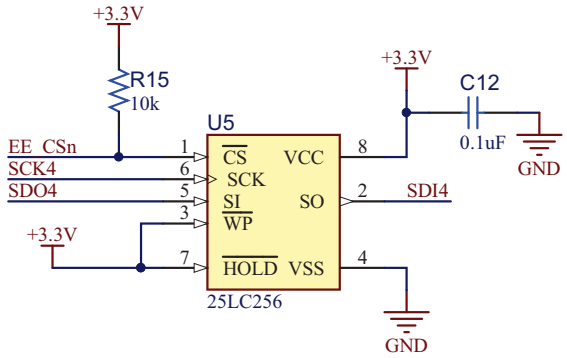

© 2015 Microchip Technology Inc.

FIGURE A-8: PICtail™ CONNECTOR AND DEBUG PORT CONNECTOR

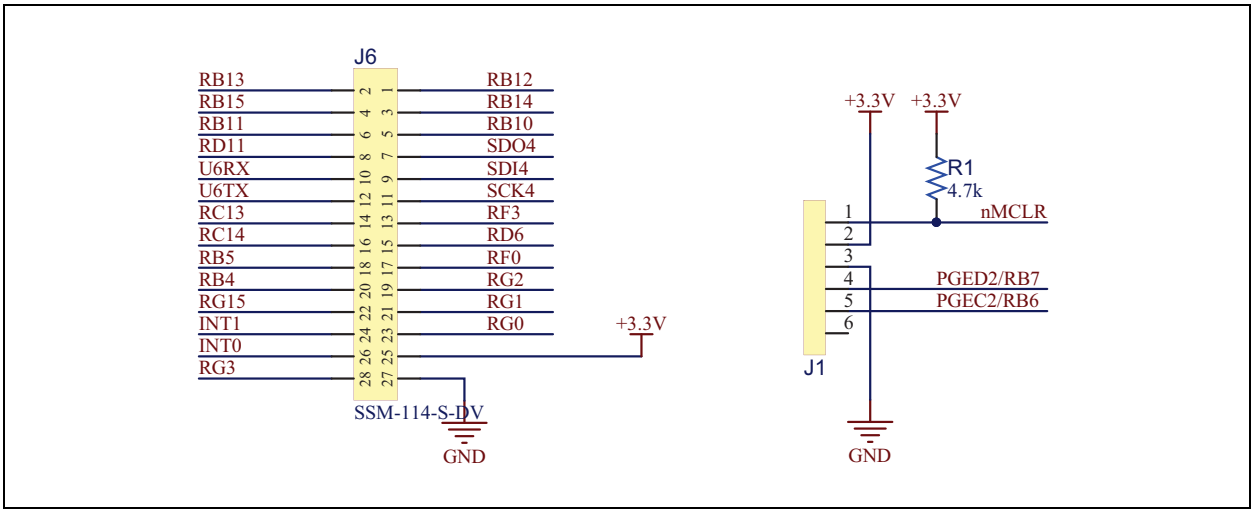

FIGURE A-9: LEDS AND SWITCHES

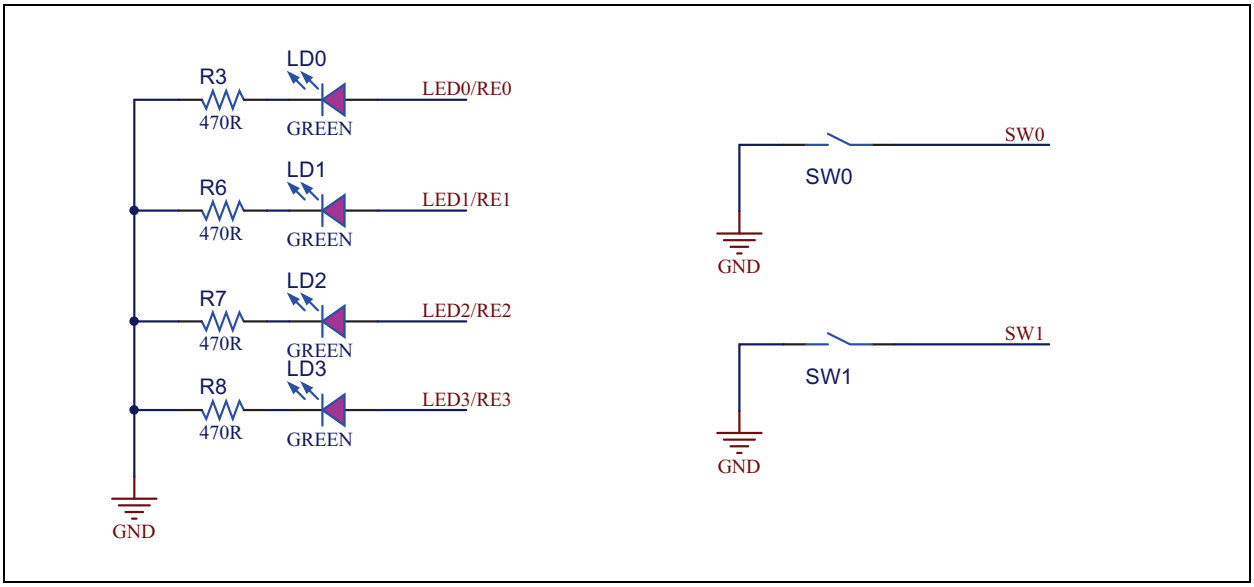

FIGURE A-10: GPIO

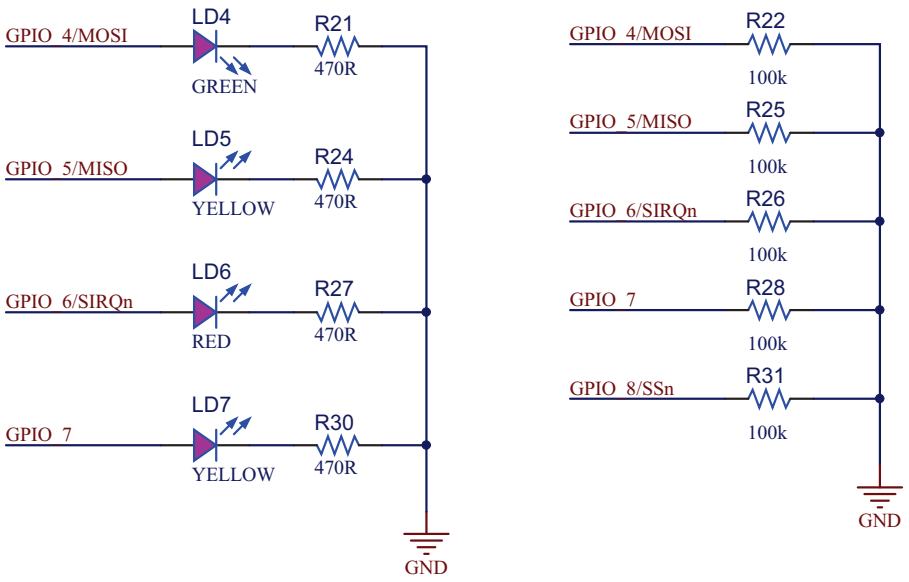

FIGURE A-11: POTENTIOMETER

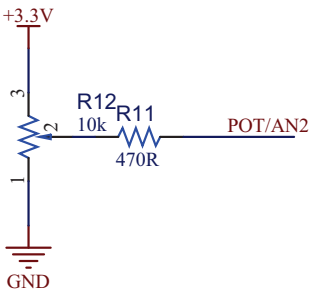

FIGURE A-12: ISP HEADER

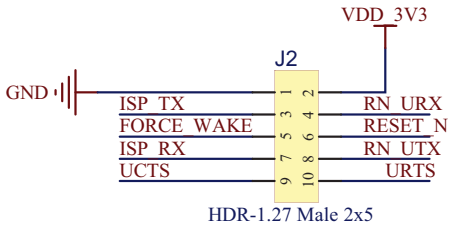

© 2015 Microchip Technology Inc.

FIGURE A-13: BOOST REGULATOR

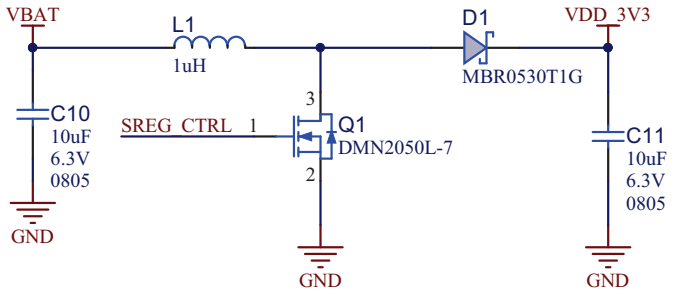

FIGURE A-14: TEST POINTS

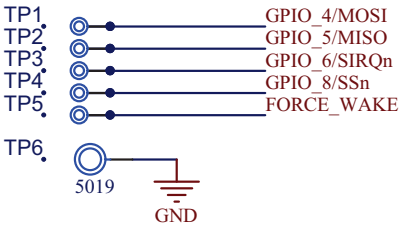

Worldwide Sales and Service

AMERICAS

Corporate Office
2355 West Chandler Blvd.
Chandler, AZ 85224-6199
Tel: 480-792-7200
Fax: 480-792-7277
Technical Support:
http://www.microchip.com/support
Web Address:
www.microchip.com

Atlanta
Duluth, GA
Tel: 678-957-9614
Fax: 678-957-1455

Austin, TX
Tel: 512-257-3370

Boston
Westborough, MA
Tel: 774-760-0087
Fax: 774-760-0088

Chicago
Itasca, IL
Tel: 630-285-0071
Fax: 630-285-0075

Cleveland
Independence, OH
Tel: 216-447-0464
Fax: 216-447-0643

Dallas
Addison, TX
Tel: 972-818-7423
Fax: 972-818-2924

Detroit
Novi, MI
Tel: 248-848-4000

Houston, TX
Tel: 281-894-5983

Indianapolis
Noblesville, IN
Tel: 317-773-8323
Fax: 317-773-5453

Los Angeles
Mission Viejo, CA
Tel: 949-462-9523
Fax: 949-462-9608

New York, NY
Tel: 631-435-6000

San Jose, CA
Tel: 408-735-9110

Canada - Toronto
Tel: 905-673-0699
Fax: 905-673-6509

ASIA/PACIFIC

Asia Pacific Office
Suites 3707-14, 37th Floor
Tower 6, The Gateway
Harbour City, Kowloon

Hong Kong
Tel: 852-2943-5100
Fax: 852-2401-3431

Australia - Sydney
Tel: 61-2-9868-6733
Fax: 61-2-9868-6755

China - Beijing
Tel: 86-10-8569-7000
Fax: 86-10-8528-2104

China - Chengdu
Tel: 86-28-8665-5511
Fax: 86-28-8665-7889

China - Chongqing
Tel: 86-23-8980-9588
Fax: 86-23-8980-9500

China - Dongguan
Tel: 86-769-8702-9880

China - Hangzhou
Tel: 86-571-8792-8115
Fax: 86-571-8792-8116

China - Hong Kong SAR
Tel: 852-2943-5100
Fax: 852-2401-3431

China - Nanjing
Tel: 86-25-8473-2460
Fax: 86-25-8473-2470

China - Qingdao
Tel: 86-532-8502-7355
Fax: 86-532-8502-7205

China - Shanghai
Tel: 86-21-5407-5533
Fax: 86-21-5407-5066

China - Shenyang
Tel: 86-24-2334-2829
Fax: 86-24-2334-2393

China - Shenzhen
Tel: 86-755-8864-2200
Fax: 86-755-8203-1760

China - Wuhan
Tel: 86-27-5980-5300
Fax: 86-27-5980-5118

China - Xian
Tel: 86-29-8833-7252
Fax: 86-29-8833-7256

ASIA/PACIFIC

China - Xiamen
Tel: 86-592-2388138
Fax: 86-592-2388130

China - Zhuhai
Tel: 86-756-3210040
Fax: 86-756-3210049

India - Bangalore
Tel: 91-80-3090-4444
Fax: 91-80-3090-4123

India - New Delhi
Tel: 91-11-4160-8631
Fax: 91-11-4160-8632

India - Pune
Tel: 91-20-3019-1500

Japan - Osaka
Tel: 81-6-6152-7160
Fax: 81-6-6152-9310

Japan - Tokyo
Tel: 81-3-6880- 3770
Fax: 81-3-6880-3771

Korea - Daegu
Tel: 82-53-744-4301
Fax: 82-53-744-4302

Korea - Seoul
Tel: 82-2-554-7200
Fax: 82-2-558-5932 or
82-2-558-5934

Malaysia - Kuala Lumpur
Tel: 60-3-6201-9857
Fax: 60-3-6201-9859

Malaysia - Penang
Tel: 60-4-227-8870
Fax: 60-4-227-4068

Philippines - Manila
Tel: 63-2-634-9065
Fax: 63-2-634-9069

Singapore
Tel: 65-6334-8870
Fax: 65-6334-8850

Taiwan - Hsin Chu
Tel: 886-3-5778-366
Fax: 886-3-5770-955

Taiwan - Kaohsiung
Tel: 886-7-213-7828

Taiwan - Taipei
Tel: 886-2-2508-8600
Fax: 886-2-2508-0102

Thailand - Bangkok
Tel: 66-2-694-1351
Fax: 66-2-694-1350

EUROPE

Austria - Wels
Tel: 43-7242-2244-39
Fax: 43-7242-2244-393

Denmark - Copenhagen
Tel: 45-4450-2828
Fax: 45-4485-2829

France - Paris
Tel: 33-1-69-53-63-20
Fax: 33-1-69-30-90-79

Germany - Dusseldorf
Tel: 49-2129-3766400

Germany - Karlsruhe
Tel: 49-721-625370

Germany - Munich
Tel: 49-89-627-144-0
Fax: 49-89-627-144-44

Italy - Milan
Tel: 39-0331-742611
Fax: 39-0331-466781

Italy - Venice
Tel: 39-049-7625286

Netherlands - Drunen
Tel: 31-416-690399
Fax: 31-416-690340

Poland - Warsaw
Tel: 48-22-3325737

Spain - Madrid
Tel: 34-91-708-08-90
Fax: 34-91-708-08-91

Sweden - Stockholm
Tel: 46-8-5090-4654

UK - Wokingham
Tel: 44-118-921-5800
Fax: 44-118-921-5820

07/14/15

© 2015 Microchip Technology Inc.