# MANUAL SETTING TYPE MAGNETIC ENCODERS

# RMS20

## FEATURES

RoHS compliant

- High resolution of 256 P/R and fine setting
- Lower consumption of electric power (15 mA maximum) due to magnetic method
- Long life for $10^5$ times continuous run due to contactless & magnetic method
- Square wave output (with Amp.)
- Smooth rotation for setting
- RoHS compliant



## PART NUMBER DESIGNATION

RMS20 - 250 - 201 - 1

- Series name
- Resolution (P/R): 100, 250, 256
- Output phase: 2 : "A" & "B"
- Output connection: 1 : Cable wire

## LIST OF PART NUMBERS

| Resolution / Item | Input voltage | Part number |
|---|---|---|
| 100 (P/R) | 5 V | RMS20-100-201-1 |
| 250 (P/R) | | RMS20-250-201-1 |
| 256 (P/R) | | RMS20-256-201-1 |

※Verify the above part numbers when placing orders.

## STANDARD SPECIFICATIONS

### Electrical characteristics

| | | | | |
|---|---|---|---|---|
| Input voltage | | DC5 V ± 5 % | | |
| Input current | | 15 mA maximum (No load) | | |
| Output wave form | | Square wave | | |
| Output phases | | A, B | | |
| (P/R) Resolution | | 100 | 250 | 256 |
| Phase difference of outputs A & B | | 90° ± 45° | | |
| Maximum frequency response | | 5 kHz | | |
| Output signal | "1 (High)" | + 4.5 V minimum | | |
| | "0 (Low)" | + 0.5 V maximum | | |
| Sensor | | Magnetoresistive element | | |

### Mechanical characteristics

| | | |
|---|---|---|
| Rotational torque | | 4.90 mN·m {50 gf·cm} maximum |
| Inertia | | 3 g·cm$^2$ maximum |
| Shaft loading (When mounting) | Radial | 9.81 N {1 kgf} maximum |
| | Axial | 9.81 N {1 kgf} maximum |
| Rotational life | | $10^5$ 回転 revolution |
| Net weight | | Approx. 20 g |
| Strength of tighten screw | | 0.49 N·m {5 kgf·cm} maximum |

### Environmental characteristics

| | |
|---|---|
| Operating temp. range | – 10 ~ 60 °C |
| Storage temp. range | – 40 ~ 70 °C |
| Protection grade | IP40 |

## RELIABILITY TEST

**The output shall satisfy the criteria below after the following tests.**

| Test item | | Test conditions | |
|---|---|---|---|
| Vibration | Power OFF | Amplitude : 1.52 mm or 98.1 m/s$^2$ (10 G) whichever is smaller.<br>10 ~ 500 Hz excursion 15 min/cycle, 8 cycles each for X, Y, Z, directions. | |
| Shock | Power OFF | 3 times each in directions (X, Z) at 490 m/s$^2$ (50 G), 11 ms. | |
| High temperature exposure | Power OFF | 70 °C 96 h | (To be measured after leaving samples for 1 h at normal temperature and humidity after the test.) |
| | Power ON | 60 °C 96 h | |
| Low temperature exposure | Power OFF | – 40 °C 96 h | |
| Humidity | Power OFF | 40 °C Relative humidity 90 ~ 95 % 96 h<br>(To be measured after wiping out moisture and leaving samples for 1 h at normal temperature and humidity after the test.) | |
| Thermal shock | Power OFF | To be done 10 cycles with the following condition<br>(To be measured after leaving samples for 1 h at normal temperature and humidity after the test.)<br>70 °C 0.5 h、– 40 °C 0.5 h | |

## OUTLINE DIMENSIONS

Unless otherwise specified, tolerance: ± 0.4 (Unit: mm)

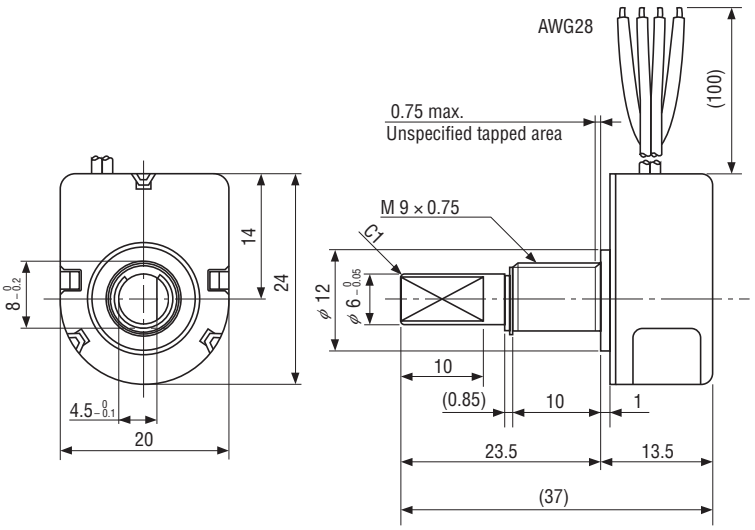


〈Accessories〉

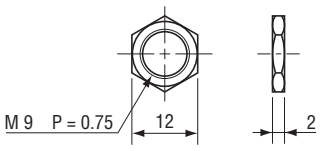


1. Nut

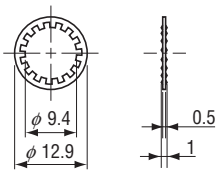


2. Washer

# RMS20
## MAGNETIC ENCODERS

## OUTPUT

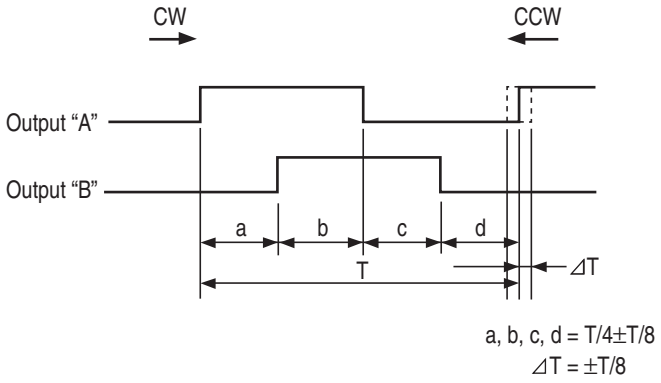


a, b, c, d = T/4±T/8
⊿T = ±T/8

## ELECTRICAL WIRING

| | |
|---|---|
| Red | Power ⊕ |
| Brown | Output "B" |
| White | Output "A" |
| Black | Power 0 (V) |

## OUTPUT CIRCUIT

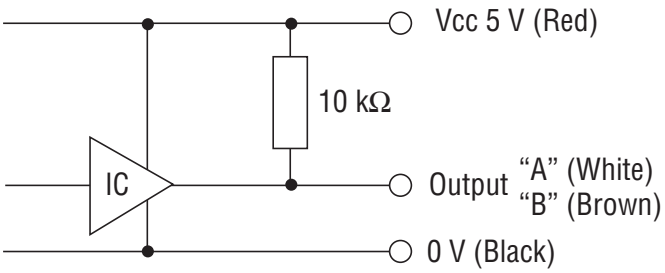


Sink current 1 mA maximum (at 25 C)