FAIRCHILD SEMICONDUCTOR®

May 2004

RMM2080

2-18 GHz Wideband Variable-Gain Driver Amplifier

General Description

The Fairchild Semiconductor's RMM2080 GaAs MMIC device is a three-stage distributed medium-power amplifier with gain control capability. The circuit incorporates ion-implanted, 0.5-µm gate MESFET devices fabricated on a semi-insulating GaAs substrate. The first two stages are 4-cell distributed amplifiers utilizing dual-gate FETs for improved gain per stage and to facilitate gain control (4x125µm & 4x250µm). The third stage is a 3-cell distributed dual-gate FET amplifier designed for high output power and efficiency (3x500µm). The RMM2080 amplifier is designed for interconnection with microstrip transmission media using fully automatic assembly techniques.

Features

- 2–18GHz Bandwidth
- 24dB Typical Gain
- ±2dB Gain Flatness
- 20dBm Output Power Typical
- Three Stages of Distributed Amplification
- Gain Control of up to 70dB range
- Dual-Gate Ion-Implanted 0.5µm FETs
- Chip Size: 4.14mm x 3.22mm x 0.1mm

Device

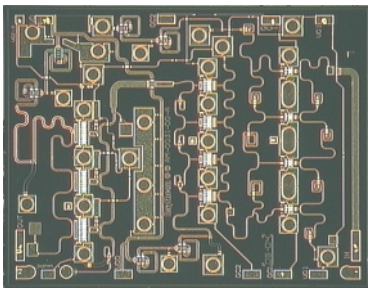

Absolute Ratings

Symbol	Parameter	Ratings	Units
Vd	Positive Drain DC Voltage (+7V Typ)	+8	V
Vg	Negative DC Voltage	-2	V
Vgd	Simultaneous (Vd-Vg)	10	V
Id	Positive DC Current	400	mA
P_{IN}(CW)	RF Input Power (from 50Ω source)	+8	dBm
T_{CASE}	Operating Baseplate Temperature	-30 to +85	°C
$T_{STORAGE}$	Storage Temperature Range	-55 to +125	°C
R_{JC}	Thermal Resistance (Channel to Backside)	22	°C/W

©2004 Fairchild Semiconductor Corporation

Electrical Characteristics (at 25°C)

50Ω system, Vd = +7V, quiescent current (Idq) = 300 mA, GC1, GC2 = +1.5V

Parameter	Min	Typ	Max	Units
Frequency Range	2	–	18	GHz
Gate Supply Voltage (Vg)[1]		-0.7		V
RF Output Power @ -1dB		20		dBm
Small Signal Gain	18	24		dB
Gain Flatness vs. Freq.		±2		dB
Input/Output Return Loss		7		dB
Gain Control Range	70			dB
Gain Control Voltage, GC1&2[2]	-5		+1.5	V

Notes:
1. Typical range of the negative gate voltage is -0.9 to 0.0V to set typical Idq of 300 mA.
2. GC1 and GC2 of +1.5V and VG23 = open corresponds to maximum gain and power.

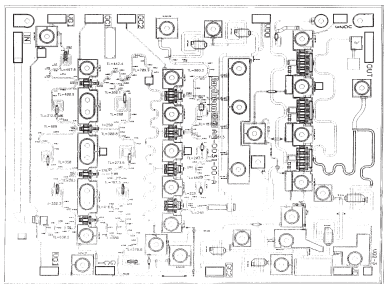

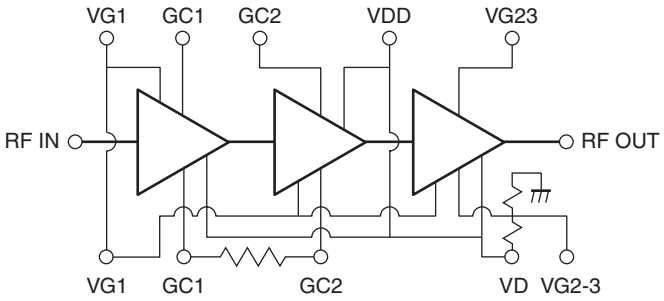

Figure 1. Block Diagram and Circuit Schematic

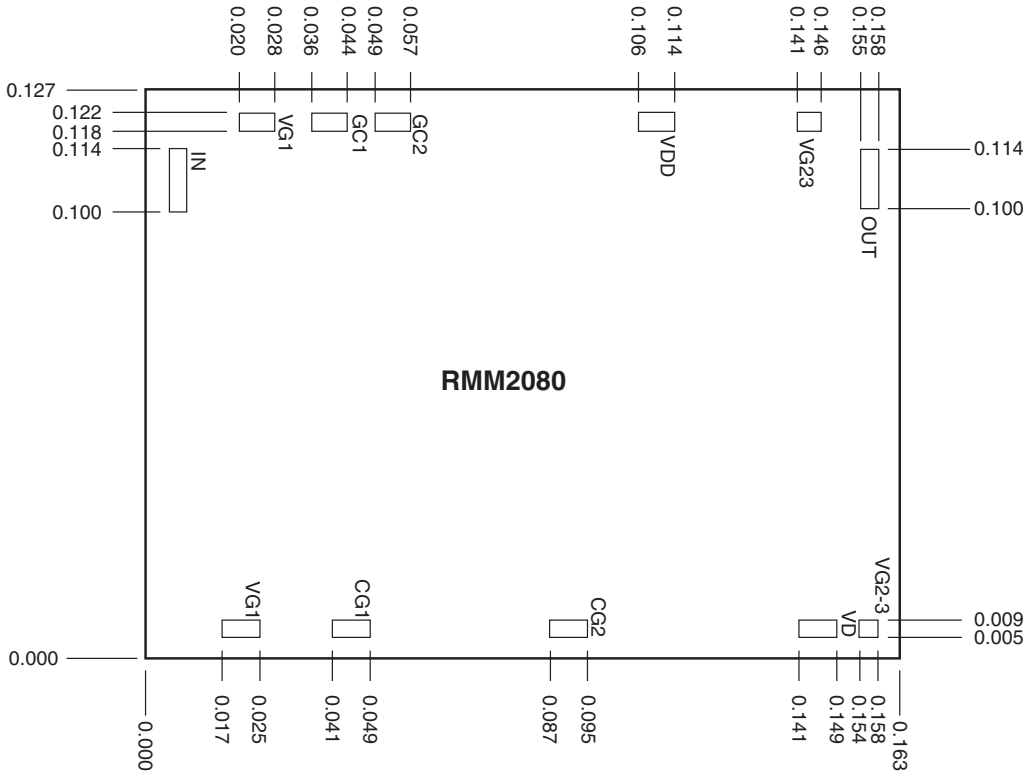

Figure 2. Location and Size of Bonding Pads (Dimensions in Inches)

©2004 Fairchild Semiconductor Corporation

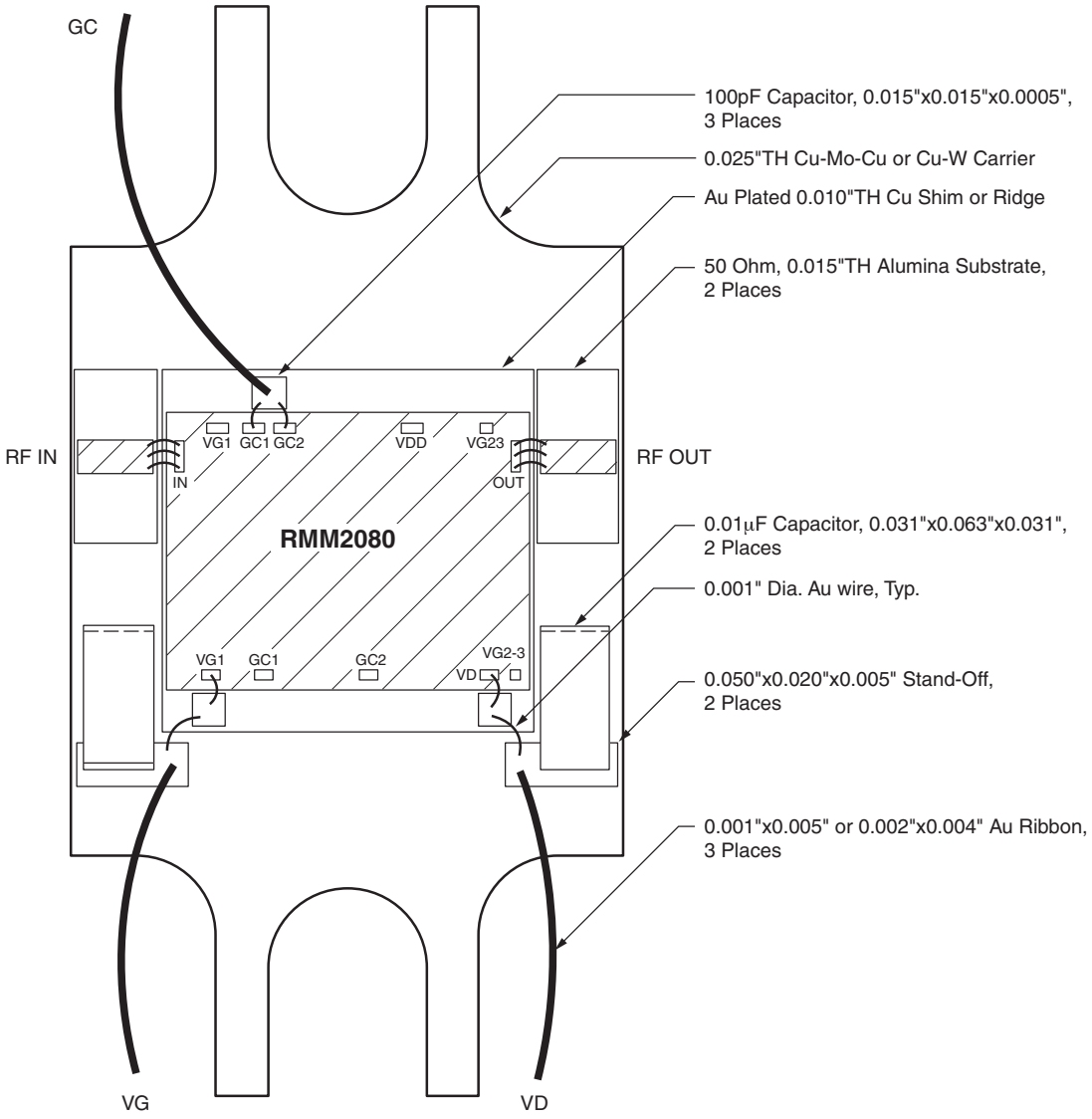

Figure 3. Example of Assembled Module

©2004 Fairchild Semiconductor Corporation

Performance Data

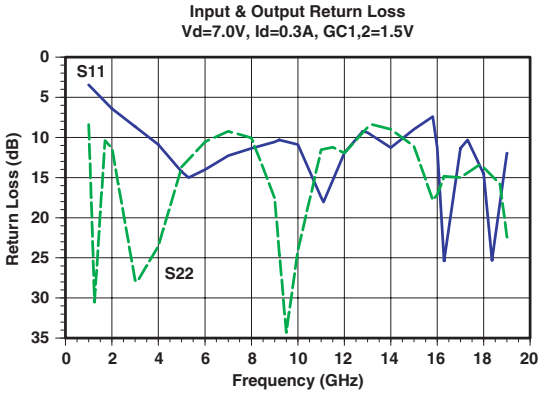

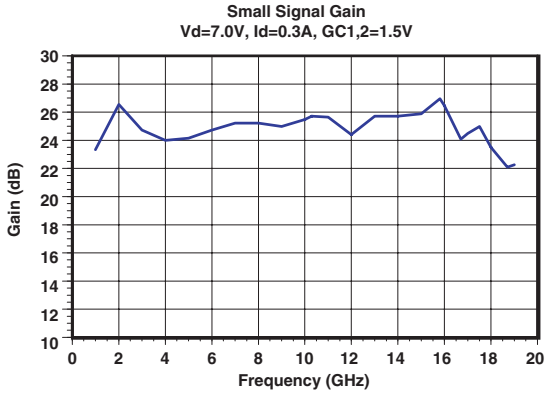

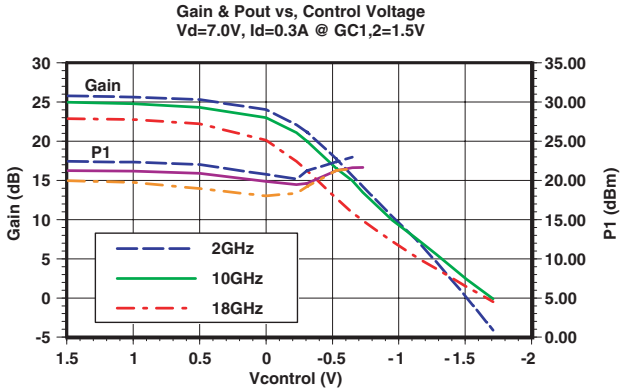

The above data is derived from fixtured measurements which include 3 parallel, 1 mil diameter, 15 mil long, gold bond wires connected to the RF input and output.

The Id @ 1dB compression increases to approximately 0.45 A. The dc supply should be able to support the required current to achieve the above performance.

©2004 Fairchild Semiconductor Corporation

TRADEMARKS

The following are registered and unregistered trademarks Fairchild Semiconductor owns or is authorized to use and is not intended to be an exhaustive list of all such trademarks.

ACEx™	FAST®	ISOPLANAR™	Power247™	SuperFET™
ActiveArray™	FASTr™	LittleFET™	PowerSaver™	SuperSOT™-3
Bottomless™	FPS™	MICROCOUPLER™	PowerTrench®	SuperSOT™-6
CoolFET™	FRFET™	MicroFET™	QFET®	SuperSOT™-8
CROSSVOLT™	GlobalOptoisolator™	MicroPak™	QS™	SyncFET™
DOME™	GTO™	MICROWIRE™	QT Optoelectronics™	TinyLogic®
EcoSPARK™	HiSeC™	MSX™	Quiet Series™	TINYOPTO™
E^2CMOS™	I^2C™	MSXPro™	RapidConfigure™	TruTranslation™
EnSigna™	*i-Lo*™	OCX™	RapidConnect™	UHC™
FACT™	ImpliedDisconnect™	OCXPro™	µSerDes™	UltraFET®
FACT Quiet Series™		OPTOLOGIC®	SILENT SWITCHER®	VCX™
Across the board. Around the world.™		OPTOPLANAR™	SMART START™	
The Power Franchise®		PACMAN™	SPM™	
Programmable Active Droop™		POP™	Stealth™	

DISCLAIMER

FAIRCHILD SEMICONDUCTOR RESERVES THE RIGHT TO MAKE CHANGES WITHOUT FURTHER NOTICE TO ANY PRODUCTS HEREIN TO IMPROVE RELIABILITY, FUNCTION OR DESIGN. FAIRCHILD DOES NOT ASSUME ANY LIABILITY ARISING OUT OF THE APPLICATION OR USE OF ANY PRODUCT OR CIRCUIT DESCRIBED HEREIN; NEITHER DOES IT CONVEY ANY LICENSE UNDER ITS PATENT RIGHTS, NOR THE RIGHTS OF OTHERS.

LIFE SUPPORT POLICY

FAIRCHILD'S PRODUCTS ARE NOT AUTHORIZED FOR USE AS CRITICAL COMPONENTS IN LIFE SUPPORT DEVICES OR SYSTEMS WITHOUT THE EXPRESS WRITTEN APPROVAL OF FAIRCHILD SEMICONDUCTOR CORPORATION.

As used herein:

1. Life support devices or systems are devices or systems which, (a) are intended for surgical implant into the body, or (b) support or sustain life, or (c) whose failure to perform when properly used in accordance with instructions for use provided in the labeling, can be reasonably expected to result in significant injury to the user.

2. A critical component is any component of a life support device or system whose failure to perform can be reasonably expected to cause the failure of the life support device or system, or to affect its safety or effectiveness.

PRODUCT STATUS DEFINITIONS

Definition of Terms

Datasheet Identification	Product Status	Definition
Advance Information	Formative or In Design	This datasheet contains the design specifications for product development. Specifications may change in any manner without notice.
Preliminary	First Production	This datasheet contains preliminary data, and supplementary data will be published at a later date. Fairchild Semiconductor reserves the right to make changes at any time without notice in order to improve design.
No Identification Needed	Full Production	This datasheet contains final specifications. Fairchild Semiconductor reserves the right to make changes at any time without notice in order to improve design.
Obsolete	Not In Production	This datasheet contains specifications on a product that has been discontinued by Fairchild semiconductor. The datasheet is printed for reference information only.