REV	DESCRIPTION	BY DATE	APPD
A	RELEASED PER ECR8036	JEM 02/10/04	JED
B	REDRAW PER ECR8988	COL 08/21/06	DW

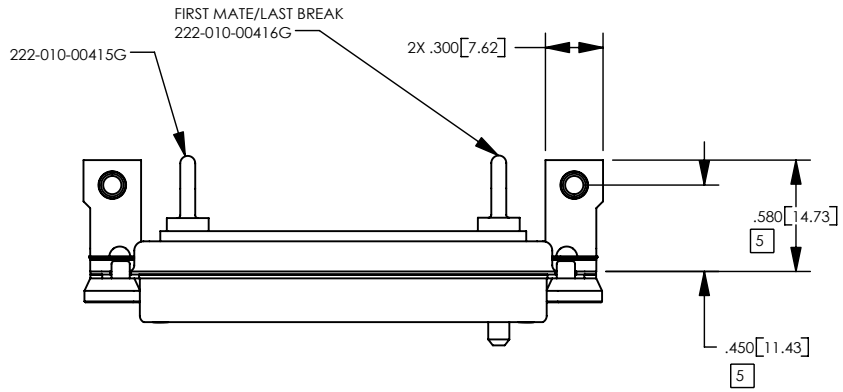

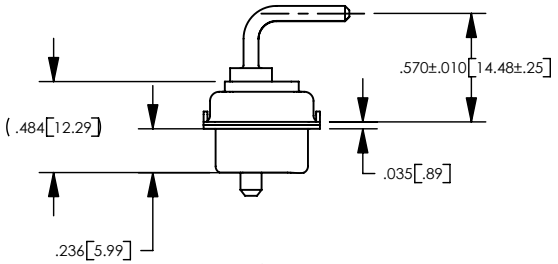

BRACKET
NOT SHOWN

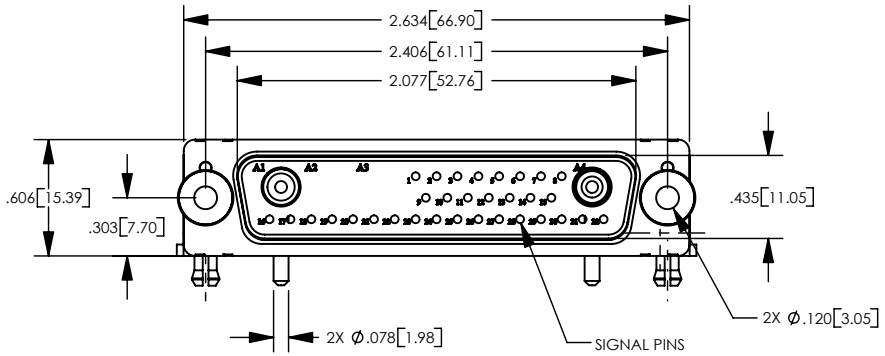

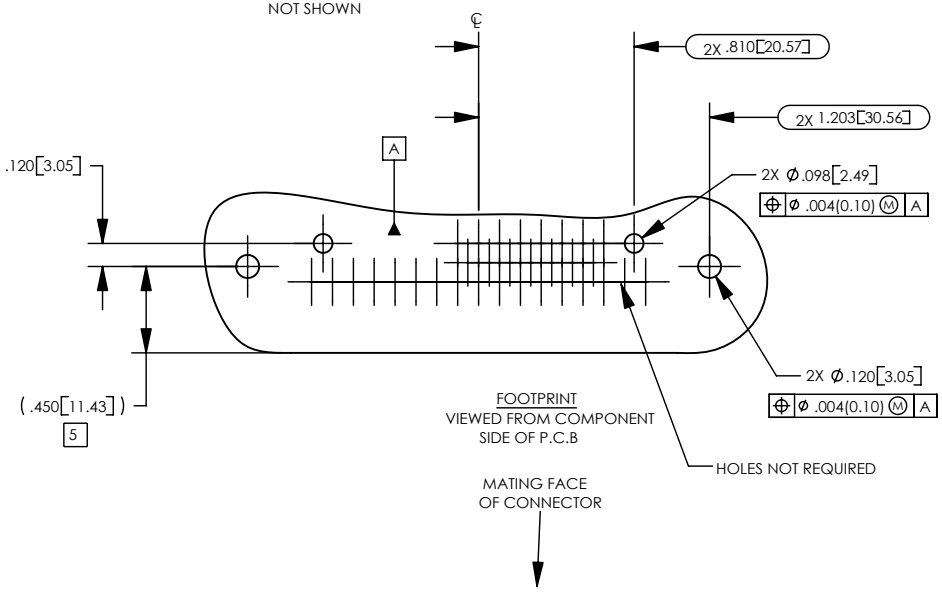

NOTES: UNLESS OTHERWISE SPECIFIED

1. FOR GENERAL SERIES SPECIFICATIONS, SEE SD10-0000.

2. MATERIAL SPECIFICATIONS:

   SHELLS: COLD ROLLED STEEL PER ASTM A568
   INSULATORS: HIGH TEMPERATURE THERMOPLASTIC
   BRACKETS: COLD ROLLED STEEL PER ASTM A620
   CLINCH NUTS: BRASS PER ASTM B16
   SNAP IN BOARDLOCKS: COPPER ALLOY

3. FINISH SPECIFICATIONS:
   INSULATORS:BLACK
   ALL OTHER METAL PARTS:YELLOW CHROMIUM OVER ZINC PER ASTM B633
   SNAP IN BOARDLOCKS: TIN PLATE PER ASTM B545

4. FOR POWER CONTACT SPECIFICATIONS SEE CONTACT SALES DRAWINGS SD222-010-00415G & SD222-010-00416G.

[5] FROM REAR OF D-SUB FLANGE.

PER ASME Y14.5M-1994
UNLESS OTHERWISE SPECIFIED:
DIMENSIONS ARE IN INCHES [MM]
TOLERANCES:
DECIMAL: .XX ± .01 [0.3]
.XXX ± ..005 [0.13]
.XXXX ± .XXXX
ANGLES: ± 2°
SCALE: 1:1

CUSTOMER DRAWING

DRAWN	DATE	APPROVED	DATE
JEM	11/25/03	CWB	12/2/03
APPROVED	DATE	APPROVED	DATE
JED	12/2/03	MG	12/3/03

WinchesterElectronics
Winchester Electronics Corporation
62 Barnes Industrial Road North
Wallingford, Connecticut 06492

RIGHT ANGLE
34W2P-D-SUB

A	SDRM34W2P-1003	SHT 1 OF 1	REV B

June 2006 - This drawing became the property of Winchester Electronics Corporation, Wallingford, CT.