DWG. NO.	RM200C-9

REV	DESCRIPTION	BY DATE	APPD
F	ECR 6167	JED 2/21/00	

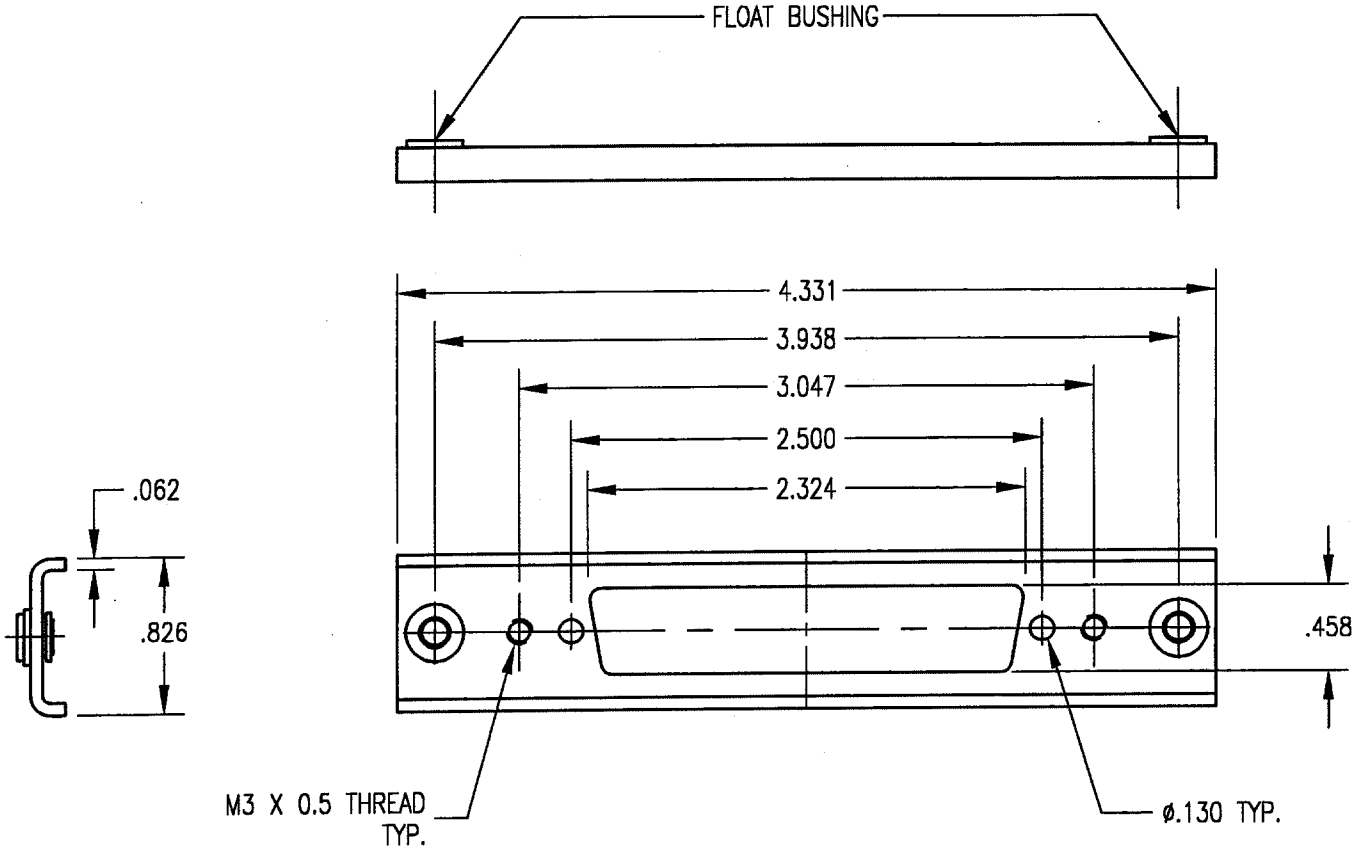

NOTES:

1. MATERIAL:
   GUIDE PLATE AND WASHER: COLD ROLLED STEEL PER ASTM A620
   FLOAT BUSHING: BRASS PER ASTM B16
2. FINISH:
   ALL METAL PARTS: YELLOW CHROMATE OVER .0002 MIN. ZINC PER ASTM B633

PER ASME Y14.5M–1994
UNLESS OTHERWISE SPECIFIED:
DIMENSIONS ARE IN INCHES [MM]
TOLERANCES:
DECIMALS .XX ± .01/0.254
.XXX ± .005/0.127
ANGLES ± 2°
SCALE: 1:1

CUSTOMER DRAWING

Litton
Winchester/Retconn 400 Park Road Watertown, Connecticut 06795

TITLE: FLOAT PLATE ASSEMBLY

DRAWN	DATE	CHECKED	DATE
EJW	9/7/99	JED	9/7/99
APPROVED	DATE	APPROVED	DATE
JMC	9/7/99	CCA	9/7/99

A	RM200C-9	SHT. 1 OF 1	REV. F

June 2006 - This drawing became the property of Winchester Electronics Corporation, Wallingford, CT.