1. Mechanical Dimensions:

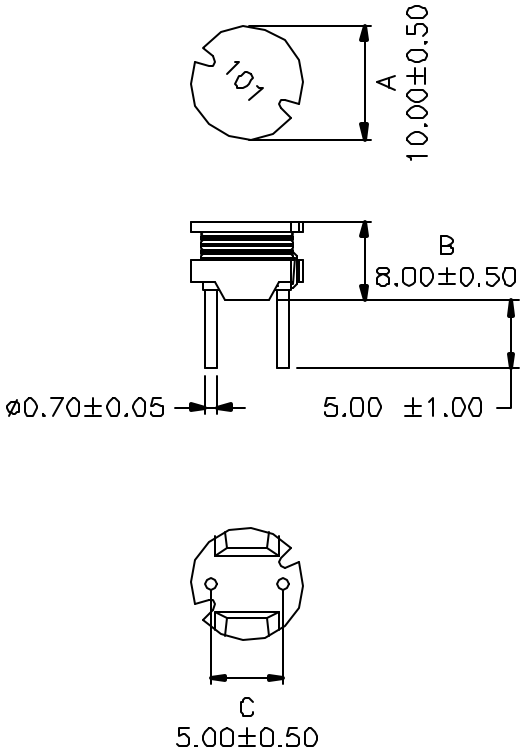

2. Schematic:

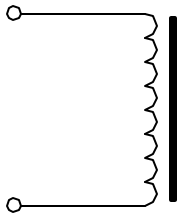

3. Electrical Specifications: @25°C

OCL: 100uH ±10% @1.0KHz, 0.25V

RATED CURRENT: 2.01ADC

DCR: 0.23 Ohms Max

Note

1. Solderability: Leads shall meet MIL-STD-202, Method 208D for solderability.
2. Flammability: UL94V-0,
3. ASTM oxygen index: > 28% ,
4. Operating Temperature Range: All listed parameters are to be within tolerance from -40°C to +85°C

DOC. REV: A/1

XFMRS Inc	Title: INDUCTOR		
UNLESS OTHERWISE SPECIFIED TOLERANCES: N/A Dimensions in MM	P/N: RLXF0810-101K		REV. A
	DWN.	虞玉坤	Nov-14-00
	CHK.	李清儿	Nov-14-00
SHEET 1 OF 1	APP.	Joe Huff	Nov-14-00

THIS DOCUMENT IS STRICTLY NOT ALLOWED TO BE DUPLICATED WITHOUT AUTHORIZATION