ROITHNER LASERTECHNIK GmbH
WIEDNER HAUPTSTRASSE 76 1040 VIENNA AUSTRIA
TEL. +43 1 586 52 43 -0, FAX. -44, OFFICE@ROITHNER-LASER.COM

RLCO-940-2000-TO3

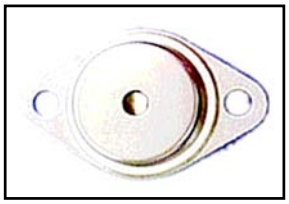

TECHNICAL DATA

High Power Infrared Laser Diode

Features

- Lasing Mode Structure: multi mode
- Peak Wavelength : typ. 940 nm
- Optical Ouput Power: 2 W
- Package: TO-3, without Photodiode



Electrical Connection

Pin Configuration	Bottom View



PIN	Function
1	LD Cathode (isolated from case)
2	LD Anode

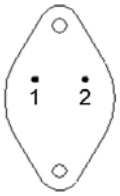

Absolute Maximum Ratings

Item	Symbol	Value	Unit
CW Output Power	P_O	2	W
Operating Case Temperature	T_C	-10 … +25	°C
Storage Temperature	T_{stg}	-20 … +80	°C

Specifications

Item	Symbol	Min.	Typ.	Max.	Unit
Optical Specifications					
CW Output Power	P_O	-	2	-	W
Center Wavelength	λ_C	937	940	943	nm
Spectral Width (FWHM)	$\Delta\lambda$	-	2.5	-	nm
Wavelength Temperature Coefficient	$\partial\lambda / \partial T$	-	0.3	-	nm/°C
FWHM Beam Divergence	$\theta_\parallel$	-	8	-	deg
	$\theta_\perp$	-	32	35	deg
Cavity Length		-	2000	-	µm
Emitting Width	W	-	100	-	µm
Polarization Ratio (TE)		-	95	-	%
Electrical Specifications					
Threshold Current	I_{th}	-	0.50	-	A
Operating Current	I_{op}	-	2.6	-	A
Power Conversion Efficiency		45	50	-	%
Slope Efficiency	η	-	1	-	W/A
Operating Voltage	U_{op}	-	1.85	2.0	V

The above specifications are for reference purpose only and subjected to change without prior notice.

ROITHNER LASERTECHNIK GmbH
WIEDNER HAUPTSTRASSE 76 1040 VIENNA AUSTRIA
TEL. +43 1 586 52 43 -0, FAX. -44, OFFICE@ROITHNER-LASER.COM

Package Dimensons

TO-3 Package (*Unit:mm*)

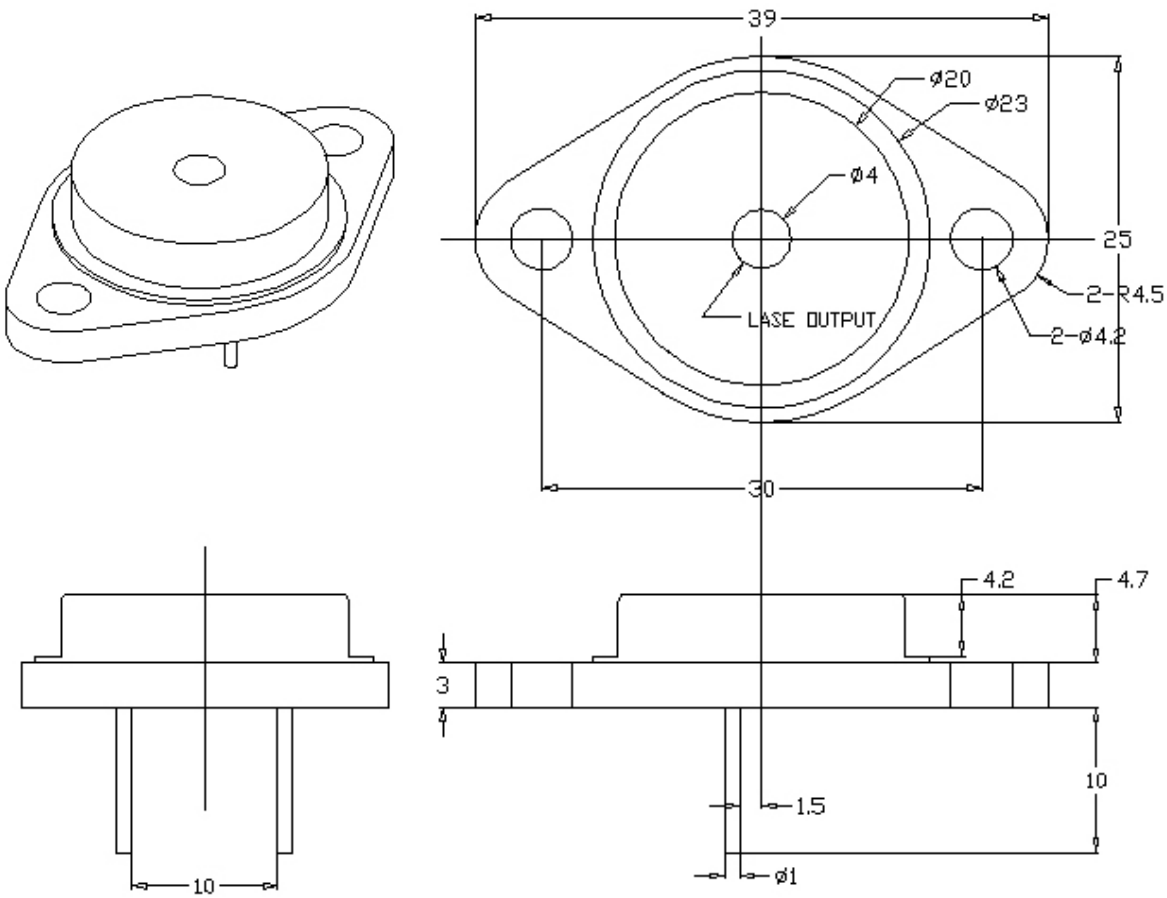

ROITHNER LASERTECHNIK GmbH
WIEDNER HAUPTSTRASSE 76 1040 VIENNA AUSTRIA
TEL. +43 1 586 52 43 -0, FAX. -44, OFFICE@ROITHNER-LASER.COM

Safety of Laser light



- Laser Light can damage the human eyes and skin. Do not expose the eye or skin directly to any laser light and/or through optical lens. When handling the LDs, wear appropriate safety glasses to prevent laser light, even any reflections from entering to the eye. Focused laser beam through optical instruments will increase the chance of eye hazard.
- This LD is emitting invisible light.

Cautions

1. Operating methode

- This LD shall change its forward voltage requirement and optical ouput power according to temperature change. Also, the LD will require more operation current to maintain same ouput power as it degrades.
- Confirm that electrical spike current generated by switching on and off does not exceed the maximum operating current level specified herein above as absolute maximum rating. Also, employ appropriat countermeasures to reduce chattering and/or overshooting in the circuit.

2. Static Electricity

- Static electricity or electrical surges will reduce and degrade the reliability of the LDs. It is recommended to use a wrist trap or anti-electrostatic glove when handeling the product.

3. Absolute Maximum Rating

- Active layer of LDs shall have high current density and generate high electric field during its operation. In order to prevent excessive damage, the LD must be operated striclty below absolute maximum rating.

