

BOURNS®

Features

- Formerly J.W. Miller® model
- Current rating up to 3.9 A
- Inductance range: 10 µH to 1000 µH
- Shielded construction
- RoHS compliant*

Applications

- DC/DC converters
- Power supplies
- Desktop notebooks
- Output chokes

RL110S Series - Radial Lead RF Choke

Electrical Specifications (@ 25 °C)

Part Number	Inductance (µH)	Tol.	Q	Test Frequency		SRF (MHz) Typ.	DCR (Ω) Max.	I dc (A)
				L	Q			
RL110S-100M-RC	10	±20 %	50	2.52 MHz	2.52 MHz	32	0.023	3.9
RL110S-120M-RC	12	±20 %	50	2.52 MHz	2.52 MHz	26	0.024	3.6
RL110S-150M-RC	15	±20 %	50	2.52 MHz	2.52 MHz	23	0.036	3.2
RL110S-180M-RC	18	±20 %	50	2.52 MHz	2.52 MHz	20	0.039	2.9
RL110S-220M-RC	22	±20 %	50	2.52 MHz	2.52 MHz	14	0.042	2.6
RL110S-270M-RC	27	±20 %	40	2.52 MHz	2.52 MHz	12	0.045	2.4
RL110S-330L-RC	33	±15 %	40	2.52 MHz	2.52 MHz	10	0.057	2.1
RL110S-390L-RC	39	±15 %	40	2.52 MHz	2.52 MHz	8.5	0.076	2.0
RL110S-470L-RC	47	±15 %	40	2.52 MHz	2.52 MHz	8.0	0.10	1.8
RL110S-560L-RC	56	±15 %	35	2.52 MHz	2.52 MHz	7.5	0.11	1.6
RL110S-680L-RC	68	±15 %	35	2.52 MHz	2.52 MHz	6.0	0.15	1.5
RL110S-820L-RC	82	±15 %	35	2.52 MHz	2.52 MHz	4.7	0.16	1.4
RL110S-101L-RC	100	±15 %	30	1 KHz	0.79 MHZ	4.4	0.19	1.2
RL110S-121L-RC	120	±15 %	30	1 KHz	0.79 MHZ	4.2	0.21	1.1
RL110S-151L-RC	150	±15 %	25	1 KHz	0.79 MHZ	3.6	0.23	1.0
RL110S-181L-RC	180	±15 %	25	1 KHz	0.79 MHZ	3.3	0.26	0.92
RL110S-221L-RC	220	±15 %	25	1 KHz	0.79 MHZ	3.1	0.29	0.83
RL110S-271L-RC	270	±15 %	25	1 KHz	0.79 MHZ	2.9	0.36	0.75
RL110S-331L-RC	330	±15 %	25	1 KHz	0.79 MHZ	2.7	0.51	0.68
RL110S-391L-RC	390	±15 %	25	1 KHz	0.79 MHZ	2.4	0.69	0.62
RL110S-471L-RC	470	±15 %	25	1 KHz	0.79 MHZ	1.5	0.98	0.57
RL110S-561L-RC	560	±15 %	20	1 KHz	0.79 MHZ	2.0	1.10	0.52
RL110S-681L-RC	680	±15 %	20	1 KHz	0.79 MHZ	1.8	1.20	0.47
RL110S-821L-RC	820	±15 %	10	1 KHz	0.79 MHZ	1.6	1.30	0.43
RL110S-102L-RC	1000	±15 %	50	1 KHz	0.25 MHZ	1.5	1.50	0.39

How To Order

RL110S - 471L - RC

Model

Value/Tolerance Code (see table)

Compliance Code
RC = RoHS Compliant

Example:
RL110S-471L-RC = 470 µH, ±15 %

Electrical Schematic



General Specifications

Rated Current.....Inductance drop 10 %, or 40 °C temperature rise at I dc

Operating Temperature
.....-30 °C to +100 °C

Storage Temperature
.....-30 °C to +100 °C

Materials

Core Material.....Ferrite
Wire .....Enameled copper
Terminal Coating..... Sn/Ag/Cu alloy

Marking

..... Value code on top of inductor

Packaging

Standard..... 100 pcs. per bag

Product Dimensions

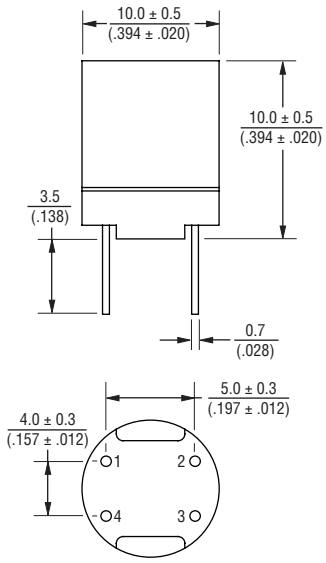

DIMENSIONS: MM (INCHES)

REV. 03/10

*RoHS Directive 2002/95/EC Jan. 27, 2003 including annex and RoHS Recast 2011/65/EU June 8, 2011.
Specifications are subject to change without notice.
Customers should verify actual device performance in their specific applications.