Innovative Service Around the Globe YAGEO

DATA SHEET

LOW OHMIC CHIP RESISTORS

RL series

5%, 2%, 1%

sizes 0402/0603/0805/1206/
1210/1218/2010/2512

RoHS compliant & Halogen Free



Product specification – November 19, 2013 V.6

YAGEO
Phycomp

SCOPE

This specification describes RL0402 to RL2512 low ohmic chip resistors with lead-free terminations made by thick film process.

APPLICATIONS

- Converters
- Printer equipment
- Server board
- Telecom
- Consumer

FEATURES

- Halogen Free Epoxy
- RoHS compliant
- Hazardous wastes
- High component and equipment reliability
- Saving of PCB space
- Non-forbidden materials used in products/production
- Low resistances applied to current sensing
- MSL Class: MSL 1

ORDERING INFORMATION - GLOBAL PART NUMBER & 12NC

Both part numbers are identified by the series, size, tolerance, packing type, temperature coefficient, taping reel and resistance value.

YAGEO BRAND ordering code

GLOBAL PART NUMBER (PREFERRED)

RL	XXXX	X	X	X	XX	XXXX	L
	(1)	(2)	(3)	(4)	(5)	(6)	(7)

(1) SIZE

0402 / 0603 / 0805 / 1206 / 1210 / 1218 / 2010 / 2512

(2) TOLERANCE

F = ±1%

G = ±2%

J = ±5%

(3) PACKAGING TYPE

R = Paper taping reel K = Embossed taping reel

(4) TEMPERATURE COEFFICIENT OF RESISTANCE

– = Based on spec

(5) TAPING REEL

07 = 7 inch dia. Reel 10 = 10 inch dia. Reel 13 = 13 inch dia. Reel

(6) RESISTANCE VALUE

There are 2~4 digits indicated the resistor value. Letter R/K/M is decimal point, no need to mention the last zero after R/K/M, e.g.1K2, not 1K20.

Detailed coding rules of resistance are shown in the table of "Resistance rule of global part number".

(7) DEFAULT CODE

Letter L is system default code for order only (Note)

Letter H is Halogen / Lead free (special code on request)

Resistance rule of global part number

Resistance code rule	Example
0RXXX (1 to 976 mΩ)	0R1 = 0.1 Ω 0R12 = 0.12 Ω 0R105 = 0.105 Ω

ORDERING EXAMPLE

The ordering code of a RL0603 chip resistor, value 0.56Ω with ±1% tolerance, supplied in 7-inch tape reel is: RL0603FR-070R56L.

NOTE

1. All our R-Chip products meet RoHS compliant and Halogen Free. "LFP" of the internal 2D reel label mentions "Lead Free Process"
2. On customized label, "LFP" or specific symbol can be printed

PHYCOMP BRAND ordering codes

Both GLOBAL PART NUMBER (preferred) and 12NC (traditional) codes are acceptable to order Phycomp brand products.

GLOBAL PART NUMBER (PREFERRED)

For detailed information of GLOBAL PART NUMBER and ordering example, please refer to page 2.

12NC CODE

2350 / 2390 / 2322 XXX XXXXX L
(1) (2) (3) (4)

SIZE	TYPE	START IN (1)	TOL. (%)	RESISTANCE RANGE	EMBOSSED (2) TAPE ON REEL	PAPER/PE (2) TAPE ON REEL (units)	
					4,000	5,000	10,000
0402	LRC31	2350	±5%	0.05 to 1 Ω	-	-	513 20xxx
	LRC32	2350	±1%	0.05 to 1 Ω	-	-	513 22xxx
0603	LRC21	2350	±5%	0.01 to 1 Ω	-	512 10xxx	-
	LRC22	2350	±1%	0.01 to 1 Ω	-	512 12xxx	-
0805	LRC11	2350	±5%	0.01 to 1 Ω	-	511 10xxx	-
	LRC12	2350	±1%	0.01 to 1 Ω	-	511 12xxx	-
1206	LRC01	2350	±5%	0.01 to 1 Ω	-	510 10xxx	-
	LRC02	2350	±1%	0.01 to 1 Ω	-	510 12xxx	-
1210	LPRC101	2390	±5%	0.01 to 0.0976 Ω	-	735 90xxx	-
	LPRC101	2390	±5%	0.1 to 1 Ω	-	735 60xxx	-
	LPRC102	2390	±1%	0.01 to 1 Ω	-	735 3xxxx	-
1218	LPRC201	2322	±5%	0.01 to 1 Ω	735 64xxx	-	-
	LPRC201	2322	±1%	0.01 to 1 Ω	735 7xxxx	-	-
2010	LPRC111	2322	±5%	0.01 to 0.0976 Ω	760 90xxx	-	-
	LPRC111	2322	±5%	0.1 to 1 Ω	760 60xxx	-	-
	LPRC111	2322	±1%	0.01 to 0.0976 Ω	761 90xxx	-	-
	LPRC111	2322	±1%	0.1 to 1 Ω	761 6xxxx	-	-
2512	LPRC221	2322	±5%	0.01 to 0.0976 Ω	762 90xxx	-	-
	LPRC221	2322	±5%	0.1 to 1 Ω	762 60xxx	-	-
	LPRC221	2322	±1%	0.01 to 0.0976 Ω	763 90xxx	-	-
	LPRC221	2322	±1%	0.1 to 1 Ω	763 6xxxx	-	-

(1) The resistors have a 12-digit ordering code starting with 2350/2390/2322.

(2) The subsequent 4 or 5 digits indicate the resistor tolerance and packaging. (In 12NC code, only 07" tape reel code is supplied. Supply of 10"/13" tape reel is requested in Global part number ordering code.)

(3) The remaining 4 or 3 digits represent the resistance value with the last digit indicating the multiplier as shown in the table of "Last digit of 12NC".

(4) Letter L is system default code for order only (Note).
Letter H is Halogen / Lead free (special code on request).

Last digit of 12NC

Resistance decade (3)	Last digit
0.01 to 0.0976Ω	0
0.1 to 0.976Ω	7
1 to 9.76Ω	8
10 to 97.6Ω	9
100 to 976Ω	1
1 to 9.76 kΩ	2
10 to 97.6 kΩ	3
100 to 976 kΩ	4
1 to 9.76 MΩ	5
10 to 97.6 MΩ	6

Example:
0.02Ω = 0200 or 200
0.3Ω = 3007 or 307
1Ω = 1008 or 108
33 kΩ = 3303 or 333
10 MΩ = 1006 or 106

ORDERING EXAMPLE

The ordering code of a RL0603 chip resistor, value 0.56 Ω with ±1% tolerance, supplied in tape of 5,000 units per reel is: 235051212567L or RL0603FR-070R56L.

NOTE

1. All our R-Chip products meet RoHS compliant and Halogen Free. "LFP" of the internal 2D reel label mentions "Lead Free Process"
2. On customized label, "LFP" or specific symbol can be printed

MARKING

RL0805 / RL1206 / RL1210 /RL1218 / RL2010 / RL2512



Fig. 1 Value = 20 mΩ

E-24 series / Non-E series (R= 25/40/50/60/250/400/500 mΩ): 4 digits

The "R" is used as a decimal point; the other 3 digits are significant.

RL0603: R≥100 mΩ, R = 10/20/30/40/50/60 mΩ



Fig. 2 Value = 22 mΩ

E-24 series / Non-E series (R= 25/40/50/60/250/400/500 mΩ):3 digits

The "R" is used as a decimal point; the other 2 digits are significant.

RL0402 / RL0603: R<100 mΩ EXCEPT 10/20/30/40/50/60 mΩ



Fig. 3

No marking

For further marking information, please see special data sheet "Chip resistors marking".

CONSTRUCTION

The resistors are constructed out of a high-grade ceramic body. Internal metal electrodes are added at each end and connected by a resistive paste. The composition of the paste is adjusted to give the approximate required resistance and laser cutting of this resistive layer that achieves tolerance trims the value. The resistive layer is covered with a protective coat and printed with the resistance value. Finally, the two external terminations (matte tin) are added. See fig. 4.

DIMENSIONS

Table 1 For outlines see fig. 4

TYPE	L (mm)	W (mm)	H (mm)	l_1 (mm)	l_2 (mm)
RL0402	1.00 ±0.10	0.50 ±0.05	0.35 ±0.05	0.20 ±0.10	0.25 ±0.10
RL0603	1.60 ±0.10	0.80 ±0.10	0.45 ±0.10	0.25 ±0.15	0.25 ±0.15
RL0805	2.00 ±0.10	1.25 ±0.10	0.50 ±0.10	0.35 ±0.20	0.35 ±0.20
RL1206	3.10 ±0.10	1.60 ±0.10	0.55 ±0.10	0.45 ±0.20	0.40 ±0.20
RL1210	3.10 ±0.10	2.60 ±0.15	0.55 ±0.10	0.50 ±0.20	0.50 ±0.20
RL1218	3.05 ±0.15	4.60 ±0.20	0.55 ±0.10	0.45 ±0.25	0.50 ±0.25
RL2010	5.00 ±0.10	2.50 ±0.15	0.55 ±0.10	0.60 ±0.20	0.50 ±0.20
RL2512	6.35 ±0.10	3.20 ±0.15	0.55 ±0.10	0.60 ±0.20	0.50 ±0.20

OUTLINES

For dimension see Table 1

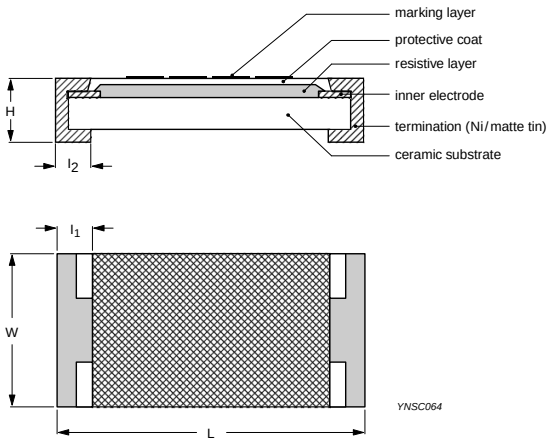

Fig. 4 Chip resistor outlines

ELECTRICAL CHARACTERISTICS

Table 2

TYPE /	RESISTANCE RANGE	TEMPERATURE COEFFICIENT OF RESISTANCE					
RL0402	50mΩ≤R<1Ω	50mΩ ≤R<100mΩ		100mΩ ≤R<500mΩ		500mΩ ≤R<1Ω	
		±1000 ppm/°C		±800 ppm/°C		±300 ppm/°C	
RL0603	10mΩ≤R<1Ω	10mΩ ≤R≤36mΩ		36mΩ <R≤91mΩ		91mΩ <R≤500mΩ	500mΩ <R<1Ω
		±1,500 ppm/°C		±1,200 ppm/°C		±800 ppm/°C	±300 ppm/°C
		10mΩ ≤R≤18mΩ	18mΩ <R≤47mΩ	47mΩ <R≤91mΩ	91mΩ <R≤360mΩ	360mΩ <R≤500mΩ	500mΩ <R<1Ω
RL0805	10mΩ≤R<1Ω	±1,500 ppm/°C	±1,200 ppm/°C	±1,000 ppm/°C	±600 ppm/°C	±300 ppm/°C	±200 ppm/°C
RL1206		±1,500 ppm/°C	±1,200 ppm/°C	±1,000 ppm/°C	±600 ppm/°C	±300 ppm/°C	±200 ppm/°C
RL1210		±1,500 ppm/°C	±1,000 ppm/°C	±800 ppm/°C	±600 ppm/°C	±300 ppm/°C	±200 ppm/°C
RL2010		±1,500 ppm/°C	±1,200 ppm/°C	±1,000 ppm/°C	±600 ppm/°C	±300 ppm/°C	±200 ppm/°C
RL2512		±1,500 ppm/°C	±1,200 ppm/°C	±800 ppm/°C	±600 ppm/°C	±300 ppm/°C	±200 ppm/°C
		10mΩ ≤R≤30mΩ	30mΩ <R≤56mΩ	56mΩ <R≤180mΩ	180mΩ <R<1Ω		
RL1218	10mΩ≤R<1Ω	±2,000 ppm/°C	±1,000 ppm/°C	±700 ppm/°C	±250 ppm/°C		

FOOTPRINT AND SOLDERING PROFILES

For recommended footprint and soldering profiles, please see the special data sheet "Chip resistors mounting".

PACKING STYLE AND PACKAGING QUANTITY

Table 3 Packing style and packaging quantity

PACKING STYLE	REEL DIMENSION	RL0402	RL0603	RL0805	RL1206	RL1210	RL1218	RL2010	RL2512
Paper taping reel (R)	7" (178 mm)	10,000	5,000	5,000	5,000	5,000	---	---	---
	10" (254 mm)	20,000	10,000	10,000	10,000	10,000	---	---	---
	13" (330 mm)	50,000	20,000	20,000	20,000	20,000	---	---	---
Embossed taping reel (K)	7" (178 mm)	---	---	---	---	---	4,000	4,000	4,000

NOTE

1. For paper/embossed tape and reel specification/dimensions, please see the special data sheet "Chip resistors packing".

FUNCTIONAL DESCRIPTION

OPERATINGTEMPERATURE RANGE

Range: –55 °C to +155 °C

POWER RATING

Each type rated power at 70 °C:
RL0402=1/16 W; RL0603=1/10 W; RL0805=1/8 W; RL1206=1/4 W; RL1210=1/2 W; RL1218=1 W; RL2010=3/4 W; RL2512=1 W.

RATED VOLTAGE

The DC or AC (rms) continuous working voltage corresponding to the rated power is determined by the following formula:

$$V = \sqrt{(P \times R)}$$

Where

V = Continuous rated DC or AC (rms) working voltage (V)

P = Rated power (W)

R = Resistance value (Ω)

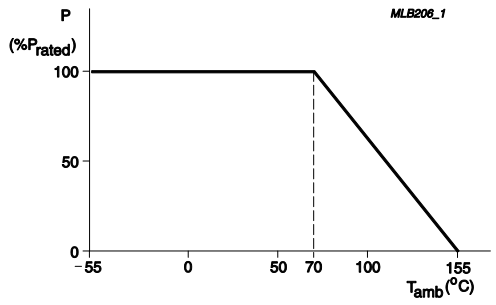

Fig. 5 Maximum dissipation (P_{max}) in percentage of rated power as a function of the operating ambient temperature (T_{amb})

TESTS AND REQUIREMENTS

Table 4 Test condition, procedure and requirements

TEST	TEST METHOD	PROCEDURE	REQUIREMENTS
Life/ Endurance	IEC 60115-1 4.25.1	1,000 hours at 70±2°C applied RCWV 1.5 hours on, 0.5 hour off, still air required	±(2% +0.5mΩ)
High Temperature Exposure/ Endurance at upper category temperature	IEC 60068-2-2	1,000 hours at maximum operating temperature depending on specification, unpowered No direct impingement of forced air to the parts Tolerances: 155±5 °C	±(1% +0.5mΩ)
Moisture Resistance	MIL-STD-202 Method 106	Each temperature / humidity cycle is defined at 8 hours, 3 cycles / 24 hours for 10d with 25 °C / 65 °C 95% R.H, without steps 7a & 7b, unpowered Parts mounted on test-boards, without condensation on parts	±(2% +0.5mΩ)
Thermal Shock	MIL-STD-202 Method 107	-55/+125 °C Number of cycles required is 300. Maximum transfer time is 20 seconds. Dwell time is 15 minutes.	±(1% +0.5mΩ)
Short time overload	IEC60115-1 4.13	2.5 times RCWV or maximum overload voltage whichever is less for 5 sec at room temperature	±(2% +0.5mΩ) No visible damage
Board Flex/ Bending	IEC 60068-2-21	Device mounted on PCB test board as described, only 1 board bending required 3 mm bending Bending time: 60±5 seconds Ohmic value checked during bending	±(1% +0.5mΩ) No visible damage

TEST	TEST METHOD	PROCEDURE	REQUIREMENTS
Solderability - Wetting	IPC/JEDECJ-STD-002B test B	Electrical Test not required Magnification 50X SMD conditions: 1st step: method B, aging 4 hours at 155 °C dry heat 2nd step: leadfree solder bath at 245±3 °C Dipping time: 3±0.5 seconds	Well tinned (≥95% covered) No visible damage
- Leaching	IPC/JEDECJ-STD-002B test D	Leadfree solder, 260 °C, 30 seconds immersion time	No visible damage
- Resistance to Soldering Heat	IEC 60068-2-58	Condition B, no pre-heat of samples. Leadfree solder, 260 °C, 10 seconds immersion time Procedure 2 for SMD: devices fluxed and cleaned with isopropanol	±(1% +0.5mΩ) No visible damage

REVISION HISTORY

REVISION	DATE	CHANGE NOTIFICATION	DESCRIPTION
Version 6	Nov. 18, 2013	-	- Operating temperature extension
Version 5	Mar 22, 2010	-	- The statement of "Halogen Free" on the cover added - Test methods updated
Version 4	Dec 11, 2008	-	- Halogen Free Epoxy - Update global part number definition
Version 3	Aug 07, 2008	-	- Change to dual brand datasheet that describe RL0402 to RL2512 with RoHS compliant - Define global part number
Version 2	Jul 15, 2005	-	- Ordering example revised
Version 1	Apr 15, 2005	-	- Size 1218 extended - Test method and procedure updated - PE tape added (paper tape will be replaced by PE tape)
Version 0	Nov. 10, 2003	-	- First issue of this specification

" Yageo reserves all the rights for revising the content of this datasheet without further notification, as long as the products itself are unchanged. Any product change will be announced by PCN."