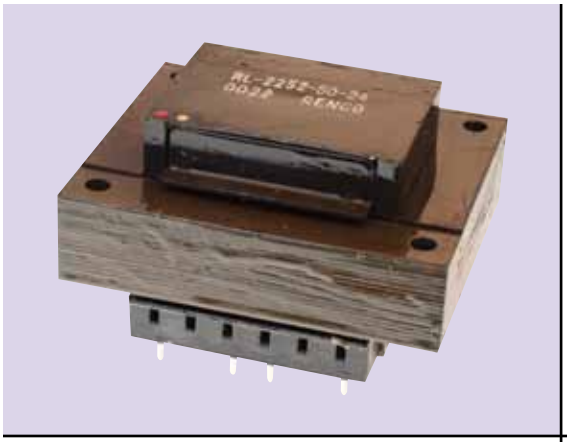

RL-2252

50/60 Hz TRANSFORMERS ALL/TRAN™ Class 2

SAFETY cULus UL RECOGNIZED E160757

DESCRIPTION

- Class 2 Laminated Transformer

ENVIRONMENTAL DATA

- Storage temperature range: -55°C to +130°C
- Operating temperature range: -40°C to +130°C

PACKAGING INFORMATION

- Packaging information: pg. 494

FEATURES & APPLICATIONS

- Designed to meet UL, CSA, VDE and IEC requirements
- Available in ratings of 2.5 VA through 50 VA
- Designed to UL1585 Class 2 with all primaries protected with fuses for your safety
- PC board mount with all advantages of RL-2250 International Series
- Hipot tested at 4000VRMS. Manufactured to Class B (130°) Insulation
- Designed to the latest UL class 2 specification. Transformers do not exceed 30 volts under no load condition, and are thermally protected with a fuse. Superior, safer and lower cost than the competition

Verify operation with sample in actual circuit. Order samples at www.rencousa.com.

MECHANICAL DIMENSIONS

U.S. Standard (mm)

PART NUMBER	VA (SIZE)	A (MAX.)	B (MAX.)	C (MAX.)	D (TYP.)	E (TYP.)	F (TYP.)
RL-2252	2.5	1.3125 (33.34)	1.625 (41.28)	1.1250 (28.58)	0.20 (5.08)	0.250 (6.35)	1.00 (25.40)
RL-2252	5	1.3125 (33.34)	1.625 (41.28)	1.3750 (34.93)	0.20 (5.08)	0.400 (10.16)	1.00 (25.40)
RL-2252	10	1.5625 (39.69)	1.875 (47.63)	1.3750 (34.93)	0.20 (5.08)	0.400 (10.16)	1.14 (28.96)
RL-2252	20	1.8750 (47.63)	2.250 (57.15)	1.6250 (41.28)	0.40 (10.16)	0.400 (10.16)	1.46 (37.08)
RL-2252	30	1.1875 (30.16)	2.625 (66.68)	1.5625 (39.69)	0.55 (13.97)	0.275 (6.99)	1.68 (42.67)
RL-2252	50	2.5000 (63.50)	3.000 (76.20)	1.8125 (46.04)	0.60 (15.24)	0.300 (7.62)	1.90 (48.26)

FRONT VIEW

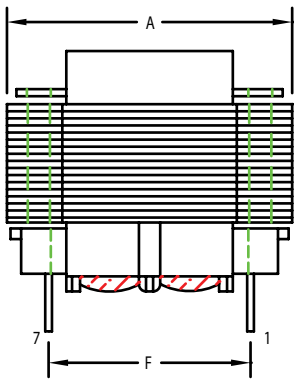

NOTE: WHITE DOT INDICATES PIN #1

SIDE VIEW

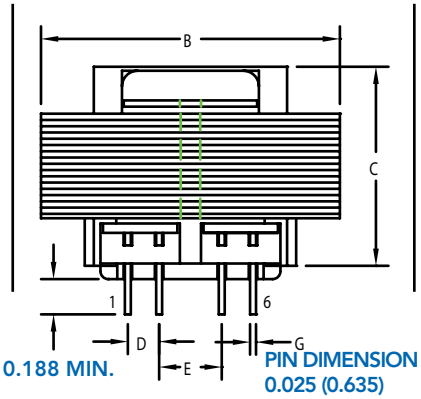

0.188 MIN.

PIN DIMENSION 0.025 (0.635) (8 PL)

BOTTOM VIEW

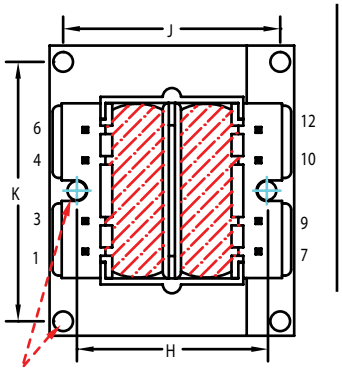

CLEARANCE HOLE FOR OPTIONAL NYLON MTG. SCREW AND NUT

SCHEMATIC

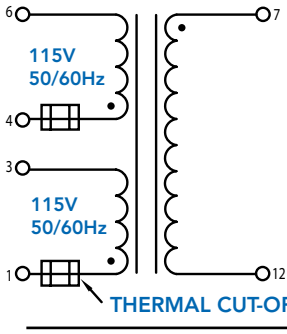

THERMAL CUT-OFF

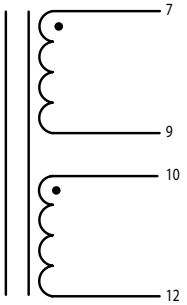

SECONDARY FOR RL-2252-24/12

RENCO ELECTRONICS INC.

595 International Place, Rockledge, FL 32955-4200 USA • www.rencousa.com • ISO 9001 Certified
Toll Free Engineering Hot Line: 800.645.5828 • P: 321.637.1000 • F: 321.637.1600

RoHS COMPLIANT cULus UL

RL-2252

Renco Part No.	G	MTG H	MTG J	MTG K	MTG. SCREW SIZE	MTG. SCREW QTY.	MTG. SCREW LBS (KG)
RL-2252-2.5	0.025SQ (0.64SQ)	1.0625 (26.99)	N/A	N/A	#4	2	0.25 (0.11)
RL-2252-5.0	0.025SQ (0.64SQ)	1.0625 (26.99)	N/A	N/A	#4	2	0.37 (0.17)
RL-2252-10.0	0.038SQ (0.97SQ)	1.2500 (31.75)	N/A	N/A	#4	2	0.53 (0.24)
RL-2252-20.0	0.038SQ (0.97SQ)	1.5000 (38.10)	N/A	N/A	#4	2	0.90 (0.41)
RL-2252-30.0	0.045SQ (1.14SQ)	N/A	1.75 (44.45)	2.1875 (55.56)	#6	4	1.15 (0.52)
RL-2252-50.0	0.045SQ (1.14SQ)	N/A	2.00 (50.80)	2.5000 (63.50)	#6	4	1.70 (0.77)

Renco Part No.	Secondary RMS Rating	Secondary Fuse (Required)
RL-2252-2.5-12	12V @ 0.20 A	N/A *
RL-2252-2.5-24	24V @ 0.10 A	N/A *
RL-2252-2.5-24/12	12V @ 0.20A OR 24V @ 0.10 A	N/A *
RL-2252-5.0-12	12V @ 0.42 A	N/A *
RL-2252-5.0-24	24V @ 0.20 A	N/A *
RL-2252-10-12 ***	12V @ 0.83 A	N/A *
RL-2252-10-24	24V @ 0.42 A	N/A *
RL-2252-20-12 ***	12V @ 1.66 A	N/A *
RL-2252-20-24 ***	24V @ 0.833 A	N/A *
RL-2252-30-12	12V @ 2.50 A	3.0 A **
RL-2252-30-24	24V @ 1.25 A	N/A *
RL-2252-50-12	12V @ 4.20 A	5.0 A **
RL-2252-50-24	24V @ 2.10 A	2.5 A **

PART NUMBER	PART WEIGHT
RL-2252-2.5	112.4g (3.96oz)
RL-2252-5.0	170.6g (6.01oz)
RL-2252-10	248.0g (8.74oz)
RL-2252-20	425.6g (15.01oz)
RL-2252-30	506.0g (17.89oz)
RL-2252-50	792.6g (27.95oz)

NOTES:
1. ELECTRICAL SPECIFICATIONS MEASURED AT 25°C
* INHERENTLY LIMITED
** NON-INHERENTLY LIMITED
*** PLEASE CALL RENCO ELECTRONICS FOR FURTHER ASSISTANCE

RENCO ELECTRONICS INC.
595 International Place, Rockledge, FL 32955-4200 USA • www.rencousa.com • ISO 9001 Certified
Toll Free Engineering Hot Line: 800.645.5828 • P: 321.637.1000 • F: 321.637.1600

RoHS COMPLIANT