Rheostats

(Potentiometers) Wirewound

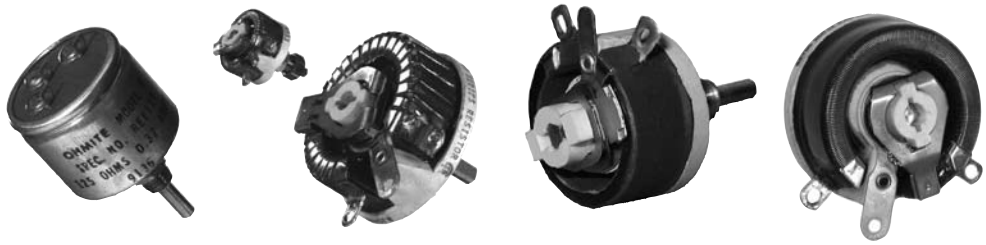

MODEL C

Model	Type	Watts	Ohmic range	Core	Max. Voltage (RMS)*	Behind panel "B" (in./mm Ref.)	Diameter "D" (in./mm Ref.)	Dimension "C" (in./mm Ref.)	Shaft torque	Rotation (±5°)
C	RCS/RCL	7.5	10.0-5K	enclosed	305	0.875/22.23	0.515/ 13.08	—	0.25-3 oz. in.	300°

• See Catalog #203 for complete details.

Mounting: Panels to 0.125" (3.18mm) thick with 1/4-32 bushing and hex nut (1/16" thick).

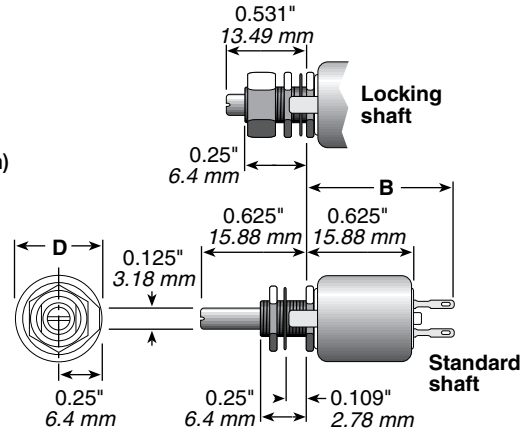



MODEL E

Model	Type	Watts	Ohmic range	Core	Max. Voltage (RMS)*	Behind panel "B" (in./mm Ref.)	Diameter "D" (in./mm Ref.)	Dimension "C" (in./mm Ref.)	Shaft torque	Rotation (±5°)
E	RES/REL	12.5	1.0-15K	open	305	0.688/17.46	0.875/ 22.23	0.594/15.08	1-6 oz. in.	300°
E	REE	12.5	1.0-15K	enclosed	305	1.219/30.96	1.047/ 26.59	—	1-6 oz. in.	300°

• See Catalog #203 for complete details.

Mounting: Panels to 0.125" (3.18mm) thick with 1/4-32 bushing and hex nut (1/16" thick).

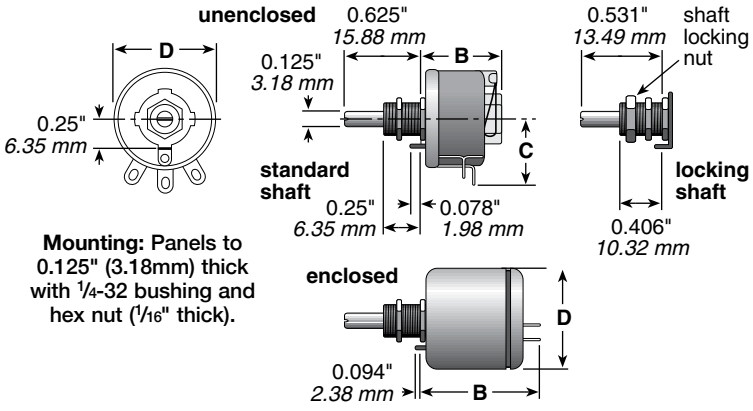

Dimensions for reference only; consult factory for details.

Since all rheostats/potentiometers are electro-mechanical devices, they are subject to mechanical wear and, therefore, have a finite life.

Models H, J, K, L and N are listed under UL File No. E-10946 and CSA File No. 21309 unless noted otherwise.

All rheostats are 10% tolerance.

Rheostats

(Potentiometers) Wirewound

MODELS H, J, G, K, L

Model	Type	Watts	Ohmic range	Core	Max. Voltage (RMS)*	Behind panel "B" (in./mm Ref.)	Diameter "D" (in./mm Ref.)	Dimension "C" (in./mm Ref.)	Shaft torque	Rotation (±5°)
H	RHS/RHL	25	1.0-25K	open	500	1.375/34.93	1.560/ 39.62	0.940/23.88	0.25-0.5 lb. in.	300°
J	RJS	50	0.5-50K	open	750	1.375/34.93	2.31 / 58.67	1.56 /39.62	0.25-2 lb. in.	300°
G	RGS	75	0.5-50K	open	900	1.750/44.45	2.75 / 69.25	1.78 /45.21	0.5-2 lb. in.	300°
K	RKS	100	0.5-50K	open	1000	1.750/44.45	3.125/ 79.38	1.91 /48.51	0.5-2 lb. in.	300°
L	RLS	150	0.5-50K	open	1200	2.000 / 50.8	4.00 /101.60	2.28 /57.91	0.5-3 lb. in.	300°

• Models H, J, G, and K also available in enclosed versions.

• See Catalog #203 for complete details.

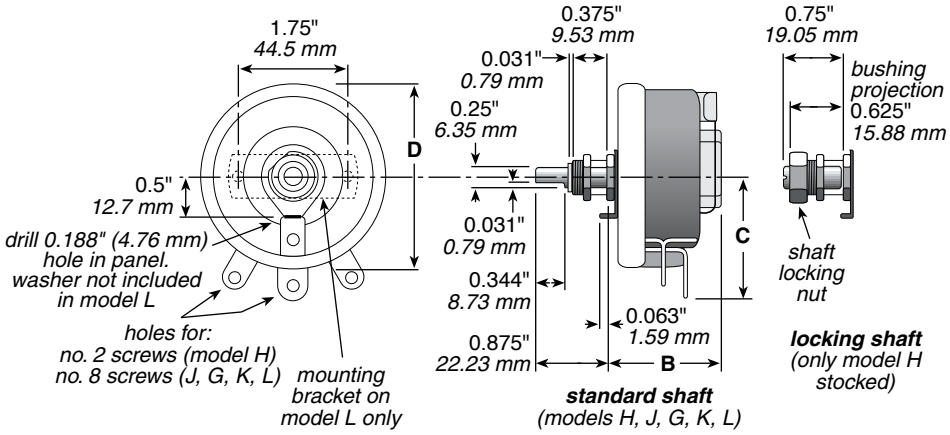

Mounting: Panels to 0.25" (6.35mm) thick with 3/8-32 bushing and hex nut (3/32" thick) (or with 10-32 x 0.75 flat-head screws for model L only).

MODELS P, N, R, U

Model	Type	Watts	Ohmic range	Core	Max. Voltage (RMS)*	Behind panel "B" (in./mm Ref.)	Diameter "D" (in./mm Ref.)	Dimension "C" (in./mm Ref.)	Shaft torque	Rotation (±5°)
P	RPS	225	1.0-30K	open	1300	2.125/53.98	5.00 /127.00	2.97 /75.44	2.5-4 lb. in.	310°
N	RNS	300	1.0-50K	open	1225	2.375/60.33	6.00 /152.40	3.44 /87.38	2.5-5 lb. in.	320°
R	RRS	500	1.0-20K	open	1450	2.125/53.98	8.00 /203.20	4.31/109.47	4.5-7 lb. in.	325°
U	RUS	1000	1.0-20K	open	1600	3.000 / 76.2	12.00 /304.80	6.38/162.05	3.5-7 lb. in.	335°

• See Catalog #203 for complete details.

Dimension "M"

P	0.875"	22.23 mm
N	1.188"	30.16 mm
R	1.5"	38.1 mm
U	3"	76.2 mm

Mounting: Panels to 1.25" (31.75mm) thick with 1/4-20 flat-head screws.

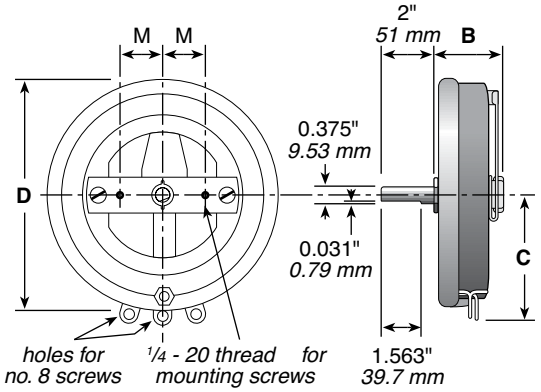

(continued)

Rheostats

(Potentiometers) Wirewound

ORDERING INFORMATION

Code	Watts	Model	Shaft	Core
CL =	7.5	C	Locking	Enclosed
CS =	7.5	C	Standard	Enclosed
EE =	12.5	E	Standard	Enclosed
EL =	12.5	E	Locking	Open
ES =	12.5	E	Standard	Open
GS =	75	G	Standard	Open
HL =	25	H	Locking	Open
HS =	25	H	Standard	Open
JS =	50	J	Standard	Open
KS =	100	K	Standard	Open
LS =	150	L	Standard	Open
NS =	300	N	Standard	Open
PS =	225	P	Standard	Open
RS =	500	R	Standard	Open
US =	1000	U	Standard	Open

Series
Rheostats
Wirewound
Potentiometers

E = RoHS compliant

R C S R 5 0 E

**Check table for standard resistance values and maximum current values*

Resistance Value*
Example:
R50 = 0.50Ω
1R0 = 1Ω
7R5 = 7.5Ω
250 = 250Ω
1K0 = 1,000Ω
1K75 = 1,750Ω
4K5 = 4,500Ω
50K = 50,000Ω

- RoHS compliant product available. Add "E" suffix to part number to specify.
- Made-to-order rheostats available: Contact nearest Ohmite sales office.

* Voltage rating dependent on resistance value.

Ohmic value	Part No. Prefix ➤ Suffix ▼	7.5W Model C			12.5W Model E					25W Model H			50W Model J		75W Model G		100W Model K		150W Model L		225W Model P		300W Model N		500W Model R		1000W Model U	
		Std. shaft	Locking		Std. shaft	Locking	Enclosed			Std. shaft	Locking																
		RCS	RCL	Amps max.	RES	REL	REE	Amps max.		RHS	RHL	Amps max.	RJS	Amps max.	RGS	Amps max.	RKS	Amps max.	RLS	Amps max.	RPS	Amps max.	RNS	Amps max.	RRS	Amps max.	RUS	Amps max.
0.5	R50												✔	10.0	✔	12.3	✔	14.1	✔	17.3								
1	1R0				✔	✔	✔	3.53		✔	✔	5.00	✔	7.07	✔	8.66	✔	10	✔	12.3	✔	15.0	✔	17.32	✔	22.3	✔	31.6
1.5	1R5																								✔	18.2	✔	25.8
2	2R0				✔	✔	✔	2.50		✔	✔	3.54	✔	5.00	✔	6.12	✔	7.07	✔	8.65	✔	10.6	✔	12.24	✔	15.8	✔	22.4
2.5	2R5				✔	✔	✔	2.24																	✔	14.1	✔	20.0
3	3R0				✔	✔	✔	2.04		✔	✔	2.88			✔	5.00	✔	5.75	✔	7.07	✔	8.66	✔	10.00	✔	12.9	✔	18.3
4	4R0												✔	3.53						✔	7.50	✔	8.66	✔	11.2	✔	15.8
5	5R0				✔	✔	✔	1.58							✔	3.88	✔	4.47	✔	5.48	✔	6.71	✔	7.75	✔	10.0	✔	14.1
6	6R0				✔	✔	✔	1.44		✔	✔	2.04	✔	2.88														
7.5	7R5														✔	3.16	✔	3.65	✔	4.47	✔	5.49	✔	6.32				
8	8R0				✔	✔	✔	1.25		✔	✔	1.77	✔	2.50											✔	7.90	✔	11.2
10	10R	✔	✔	0.86	✔	✔	✔	1.12		✔	✔	1.58			✔	2.74	✔	3.16	✔	3.88	✔	4.74	✔	5.48			✔	10.0
12	12R												✔	2.04													
12.5	12R5																								✔	6.30	✔	8.95
15	15R	✔	✔	0.71	✔	✔	✔	0.91		✔	✔	1.29							✔	3.163	✔	3.87	✔	4.47				
16	16R												✔	1.76	✔	2.17	✔	2.50							✔	5.60	✔	7.90
22	22R												✔	1.50														
25	25R	✔	✔	0.55	✔	✔	✔	0.71		✔	✔	1.00			✔	1.73	✔	2.0	✔	2.450	✔	3.00	✔	3.46	✔	4.47	✔	6.33
35	35R	✔	✔	0.46	✔	✔	✔	0.60		✔	✔	0.845	✔	1.19					✔	2.070								
40	40R																								✔	3.54		
50	50R	✔	✔	0.39	✔	✔	✔	0.50		✔	✔	0.707	✔	1.00	✔	1.23	✔	1.41	✔	1.735	✔	2.12	✔	2.45	✔	3.16	✔	4.47
75	75R	✔	✔	0.32	✔	✔	✔	0.40		✔	✔	0.575			✔	1.00	✔	1.15	✔	1.415	✔	1.73	✔	2.00			✔	3.65
80	80R												✔	0.790										✔	2.52		
100	100	✔	✔	0.27	✔	✔	✔	0.36		✔	✔	0.500			✔	0.866	✔	1.00	✔	1.225	✔	1.50	✔	1.73			✔	3.16
125	125				✔	✔	✔	0.32		✔	✔	0.445	✔	0.630											✔	2.00		
150	150	✔	✔	0.22	✔	✔	✔	0.29					✔	0.575					✔	1.000	✔	1.22	✔	1.41				
160	160																											
175	175				✔	✔	✔	0.27		✔	✔	0.375													✔	1.69	✔	2.39
200	200	✔	✔	0.19	✔	✔	✔	0.25							✔	0.612	✔	0.707	✔	0.865	✔	1.06	✔	1.22				
225	225												✔	0.470												✔	2.11
250	250	✔	✔	0.17	✔	✔	✔	0.22		✔	✔	0.316							✔	0.775					✔	1.41		
300	300												✔	0.408	✔	0.500	✔	0.575			✔	0.866	✔	1.00			✔	1.83
325	325																								✔	1.24		
350	350	✔	✔	0.15	✔	✔	✔	0.19		✔	✔	0.267							✔	0.655								
400	400														✔	0.433	✔	0.500			✔	0.750	✔	0.866			✔	1.48
500	500	✔	✔	0.12	✔	✔	✔	0.16		✔	✔	0.222	✔	0.316	✔	0.388	✔	0.447	✔	0.548					✔	1.00	✔	1.41
600	600																											
700	700																				✔	0.567	✔	0.655				
750	750	✔	✔	0.10	✔	✔	✔	0.13		✔	✔	0.182			✔	0.316	✔	0.365	✔	0.447					✔	0.817	✔	1.15
800	800												✔	0.250													
900	900																				✔	0.500	✔	0.578				
1000	1K0	✔	✔	0.086	✔	✔	✔	0.10		✔	✔	0.155	✔	0.224	✔	0.274	✔	0.316							✔	0.707	✔	1.00
1200	1K2																				✔	0.433	✔	0.500				
1250	1K25																		✔	0.346								
1500	1K5	✔	✔	0.071	✔	✔	✔	0.090		✔	✔	0.129			✔	0.224	✔	0.258			✔	0.387	✔	0.447	✔	0.577	✔	0.816
1600	1K6												✔	0.176													
1750	1K75																				✔	0.358	✔	0.414				
1800	1K8																		✔	0.288								
2000	2K0														✔	0.194	✔	0.224			✔	0.336	✔	0.387	✔	0.500		
2250	2K25																		✔	0.259								
2500	2K5	✔	✔	0.055	✔	✔	✔	0.070		✔	✔	0.100	✔	0.141	✔	0.173	✔	0.200			✔	0.300	✔	0.346	✔	0.447	✔	0.633
3000	3K0																		✔	0.224								
3500	3K5	✔	✔	0.046	✔	✔	✔	0.060		✔	✔	0.084	✔	0.119														
4500	4K5																		✔	0.182								
5000	5K0	✔	✔	0.039	✔	✔	✔	0.050		✔	✔	0.070	✔	0.100	✔	0.123	✔	0.141										
7500	7K5				✔	✔	✔	0.041		✔	✔	0.058			✔	0.100	✔	0.115	✔	0.141								
8000	8K0												✔	0.079														
10000	10K				✔	✔	✔	0.035		✔	✔	0.050	✔	0.070	✔	0.087	✔	0.100	✔	0.122								
12500	12K5				✔	✔	✔	0.031																				
15000	15K				✔	✔	✔	0.029		✔	✔	0.041	✔	0.058														
20000	20K									✔	✔	0.035	✔	0.050														
25000	25K									✔	✔	0.032	✔	0.045														
30000	30K												✔	0.041														
40000	40K												✔	0.035														
50000	50K												✔	0.032														

✔ = Standard values; check availability

Rheostats are silicone-ceramic coated at and above the following ohmic values:

Model C: all
Model E: 750Ω
Model H: 2000Ω
Model J: 5000Ω
Model G: 5000Ω
Model K: 5000Ω
Model L: 7500Ω