

Is Now Part of



ON Semiconductor®

To learn more about ON Semiconductor, please visit our website at
www.onsemi.com

Please note: As part of the Fairchild Semiconductor integration, some of the Fairchild orderable part numbers will need to change in order to meet ON Semiconductor's system requirements. Since the ON Semiconductor product management systems do not have the ability to manage part nomenclature that utilizes an underscore (_), the underscore (_) in the Fairchild part numbers will be changed to a dash (-). This document may contain device numbers with an underscore (_). Please check the ON Semiconductor website to verify the updated device numbers. The most current and up-to-date ordering information can be found at www.onsemi.com. Please email any questions regarding the system integration to Fairchild_questions@onsemi.com.

ON Semiconductor and the ON Semiconductor logo are trademarks of Semiconductor Components Industries, LLC dba ON Semiconductor or its subsidiaries in the United States and/or other countries. ON Semiconductor owns the rights to a number of patents, trademarks, copyrights, trade secrets, and other intellectual property. A listing of ON Semiconductor's product/patent coverage may be accessed at www.onsemi.com/site/pdf/Patent-Marking.pdf. ON Semiconductor reserves the right to make changes without further notice to any products herein. ON Semiconductor makes no warranty, representation or guarantee regarding the suitability of its products for any particular purpose, nor does ON Semiconductor assume any liability arising out of the application or use of any product or circuit, and specifically disclaims any and all liability, including without limitation special, consequential or incidental damages. Buyer is responsible for its products and applications using ON Semiconductor products, including compliance with all laws, regulations and safety requirements or standards, regardless of any support or applications information provided by ON Semiconductor. "Typical" parameters which may be provided in ON Semiconductor data sheets and/or specifications can and do vary in different applications and actual performance may vary over time. All operating parameters, including "Typicals" must be validated for each customer application by customer's technical experts. ON Semiconductor does not convey any license under its patent rights nor the rights of others. ON Semiconductor products are not designed, intended, or authorized for use as a critical component in life support systems or any FDA Class 3 medical devices or medical devices with a same or similar classification in a foreign jurisdiction or any devices intended for implantation in the human body. Should Buyer purchase or use ON Semiconductor products for any such unintended or unauthorized application, Buyer shall indemnify and hold ON Semiconductor and its officers, employees, subsidiaries, affiliates, and distributors harmless against all claims, costs, damages, and expenses, and reasonable attorney fees arising out of, directly or indirectly, any claim of personal injury or death associated with such unintended or unauthorized use, even if such claim alleges that ON Semiconductor was negligent regarding the design or manufacture of the part. ON Semiconductor is an Equal Opportunity/Affirmative Action Employer. This literature is subject to all applicable copyright laws and is not for resale in any manner.

N-Channel Power MOSFET 60V, 70A, 14 mΩ

These are N-Channel power MOSFETs manufactured using the MegaFET process. This process, which uses feature sizes approaching those of LSI circuits, gives optimum utilization of silicon, resulting in outstanding performance. They were designed for use in applications such as switching regulators, switching converters, motor drivers and relay drivers. These transistors can be operated directly from integrated circuits.

Formerly developmental type TA78440.

Ordering Information

PART NUMBER	PACKAGE	BRAND
RFP70N06	TO-220AB	RFP70N06

NOTE: When ordering use the entire part number. Add the suffix 9A to obtain the TO-263AB variant in tape and reel, e.g. RF1S70N06SM9A.

Features

- 70A, 60V
- $r_{DS(on)} = 0.014\Omega$
- Temperature Compensated PSPICE® Model
- Peak Current vs Pulse Width Curve
- UIS Rating Curve (Single Pulse)
- 175°C Operating Temperature
- Related Literature
  - TB334 “Guidelines for Soldering Surface Mount Components to PC Boards”

Symbol

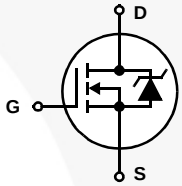

Packaging

JEDEC TO-220AB

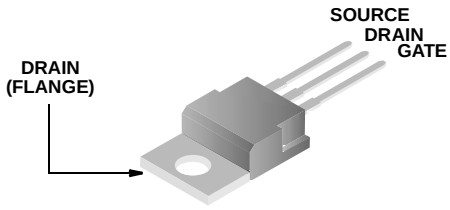

©2005 Fairchild Semiconductor Corporation

Absolute Maximum Ratings $T_C = 25^oC$, Unless Otherwise Specified

		RFP70N06	UNITS
Drain to Source Voltage (Note 1)	V_{DSS}	60	V
Drain to Gate Voltage (R_{GS} = 20kΩ) (Note 1)	V_{DGR}	60	V
Continuous Drain Current	I_D	70	A
Pulsed Drain Current (Note 3)	I_{DM}	Refer to Peak Current Curve	
Gate to Source Voltage	V_{GS}	±20	V
Single Pulse Avalanche Rating	E_{AS}	Refer to UIS Curve	A
Power Dissipation	P_D	150	W
Linear Derating Factor		1.0	$W/^oC$
Operating and Storage Temperature	T_J, T_{STG}	-55 to 175	^oC
Maximum Temperature for Soldering			
Leads at 0.063in (1.6mm) from Case for 10s	T_L	300	^oC
Package Body for 10s, See Techbrief 334	T_{pkg}	260	^oC

CAUTION: Stresses above those listed in "Absolute Maximum Ratings" may cause permanent damage to the device. This is a stress only rating and operation of the device at these or any other conditions above those indicated in the operational sections of this specification is not implied.

NOTE:

1. $T_J = 25^oC$ to 150^oC.

Electrical Specifications $T_C = 25^oC$, Unless Otherwise Specified

PARAMETER	SYMBOL	TEST CONDITIONS		MIN	TYP	MAX	UNITS
Drain to Source Breakdown Voltage	BV_{DSS}	I_D = 250μA, V_{GS} = 0V (Figure 11)		60	-	-	V
Gate Threshold Voltage	$V_{GS(TH)}$	V_{GS} = V_{DS}, I_D = 250μA (Figure 10)		2	-	4	V
Zero Gate Voltage Drain Current	I_{DSS}	V_{DS} = 60V, V_{GS} = 0V		-	-	1	μA
		V_{DS} = 0.8 x Rated BV_{DSS}, $T_C = 150^oC$		-	-	25	μA
Gate to Source Leakage Current	I_{GSS}	V_{GS} = ±20V		-	-	±100	nA
Drain to Source On Resistance (Note 2)	$r_{DS(ON)}$	I_D = 70A, V_{GS} = 10V (Figure 9)		-	-	0.014	Ω
Turn-On Time	$t_{(ON)}$	V_{DD} = 30V, $I_D \approx$ 70A, R_L = 0.43Ω, V_{GS} = 10V, R_{GS} = 2.5Ω (Figure 13)		-	-	190	ns
Turn-On Delay Time	$t_{d(ON)}$			-	10	-	ns
Rise Time	t_r			-	137	-	ns
Turn-Off Delay Time	$t_{d(OFF)}$			-	32	-	ns
Fall Time	t_f			-	24	-	ns
Turn-Off Time	$t_{(OFF)}$			-	-	73	ns
Total Gate Charge	$Q_{g(TOT)}$	V_{GS} = 0V to 20V	V_{DD} = 48V, I_D = 70A, R_L = 0.68Ω, $I_{g(REF)}$ = 2.2mA (Figure 13)	-	120	156	nC
Gate Charge at 10V	$Q_{g(10)}$	V_{GS} = 0V to 10V		-	65	85	nC
Threshold Gate Charge	$Q_{g(TH)}$	V_{GS} = 0V to 2V		-	5.0	6.5	nC
Input Capacitance	C_{ISS}	V_{DS} = 25V, V_{GS} = 0V, f = 1MHz (Figure 12)		-	2250	-	pF
Output Capacitance	C_{OSS}			-	792	-	pF
Reverse Transfer Capacitance	C_{RSS}			-	206	-	pF
Thermal Resistance, Junction to Case	$R_{\theta JC}$			-	-	1.0	$^oC/W$
Thermal Resistance, Junction to Ambient	$R_{\theta JA}$	TO-220		-	-	62	$^oC/W$
		-		-	-	-	-

Source to Drain Diode Specifications

PARAMETER	SYMBOL	TEST CONDITIONS	MIN	TYP	MAX	UNITS
Source to Drain Diode Voltage	V_{SD}	I_{SD} = 70A		-	1.5	V
Reverse Recovery Time	t_{rr}	I_{SD} = 70A, dI_{SD}/dt = 100A/μs		-	52	ns

NOTES:

2. Pulse test: pulse width ≤300ms, duty cycle ≤2%.
3. Repetitive rating: pulse width is limited by maximum junction temperature. See Transient Thermal Impedance curve (Figure 3) and Peak Current Capability Curve (Figure 5).

©2005 Fairchild Semiconductor Corporation

Typical Performance Curves $T_C = 25^oC$, Unless Otherwise Specified

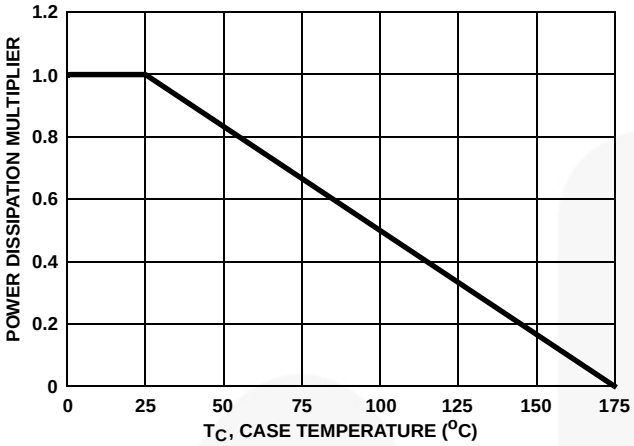

FIGURE 1. NORMALIZED POWER DISSIPATION vs CASE TEMPERATURE

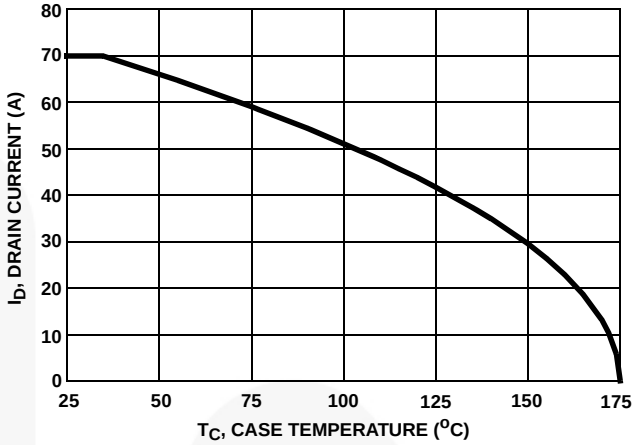

FIGURE 2. MAXIMUM CONTINUOUS DRAIN CURRENT vs CASE TEMPERATURE

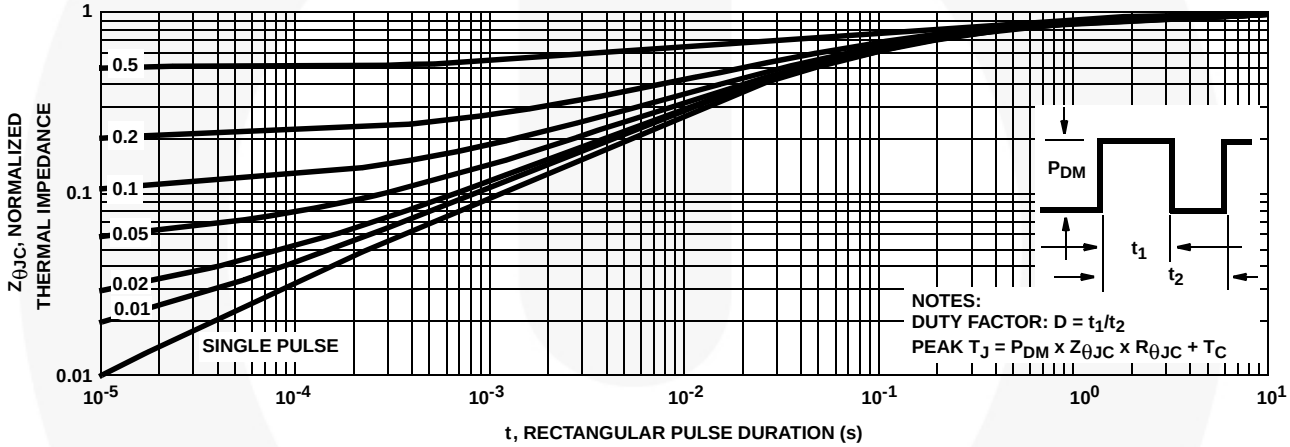

FIGURE 3. NORMALIZED MAXIMUM TRANSIENT THERMAL IMPEDANCE

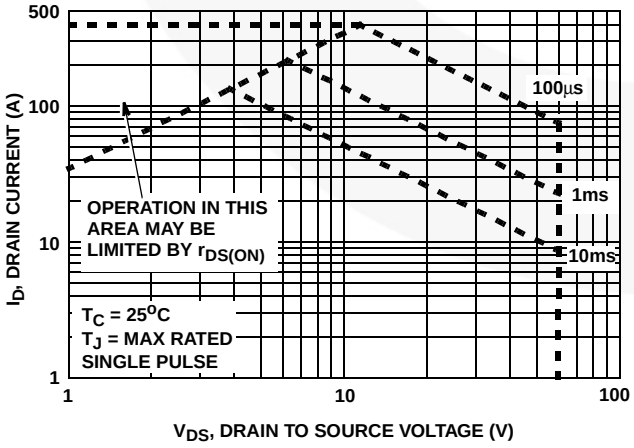

FIGURE 4. FORWARD BIAS SAFE OPERATING AREA

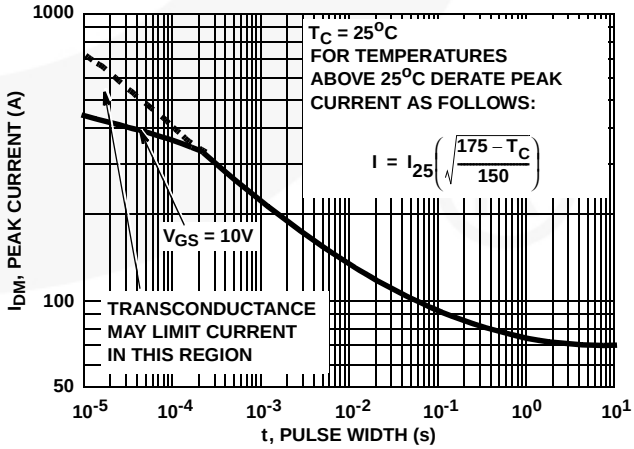

FIGURE 5. PEAK CURRENT CAPABILITY

©2005 Fairchild Semiconductor Corporation

Typical Performance Curves $T_C = 25^oC$, Unless Otherwise Specified **(Continued)**

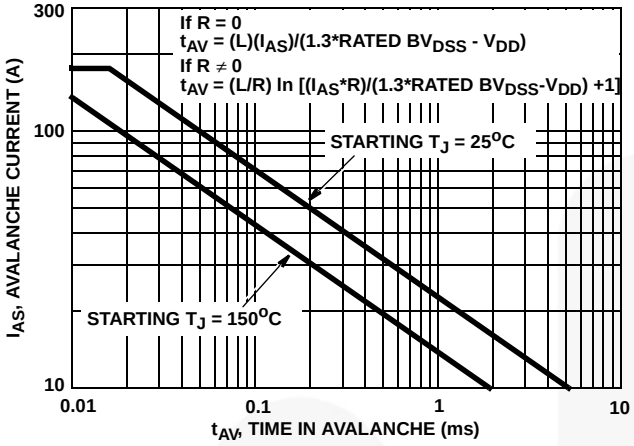

NOTE: Refer to Fairchild Application Notes AN9321 and AN9322.

FIGURE 6. UNCLAMPED INDUCTIVE SWITCHING CAPABILITY

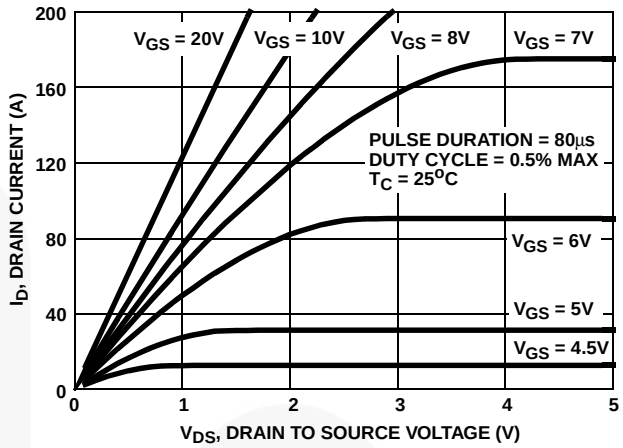

FIGURE 7. SATURATION CHARACTERISTICS

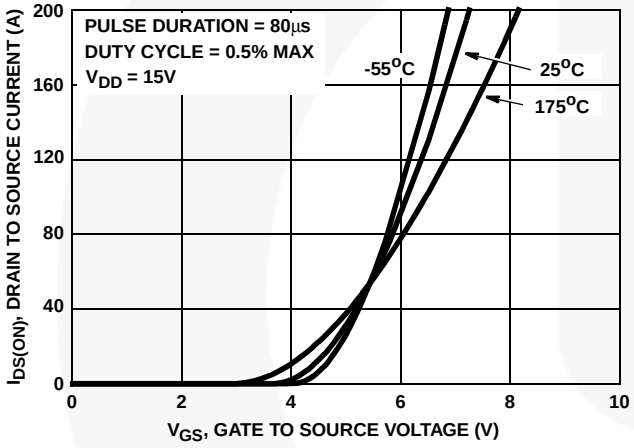

FIGURE 8. TRANSFER CHARACTERISTICS

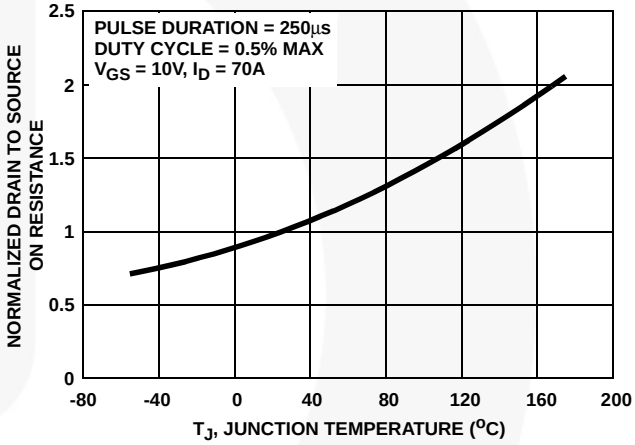

FIGURE 9. NORMALIZED DRAIN TO SOURCE ON RESISTANCE vs JUNCTION TEMPERATURE

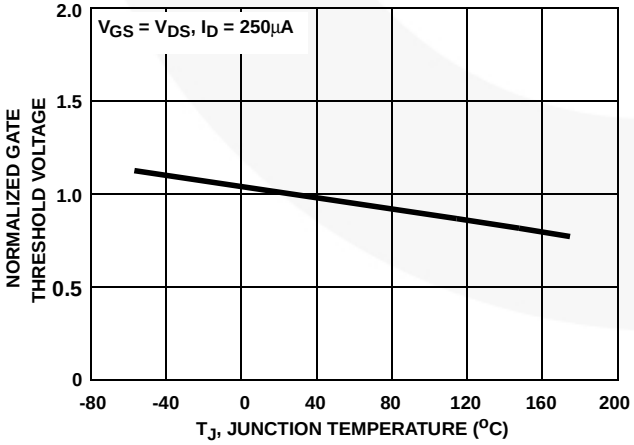

FIGURE 10. NORMALIZED GATE THRESHOLD VOLTAGE vs JUNCTION TEMPERATURE

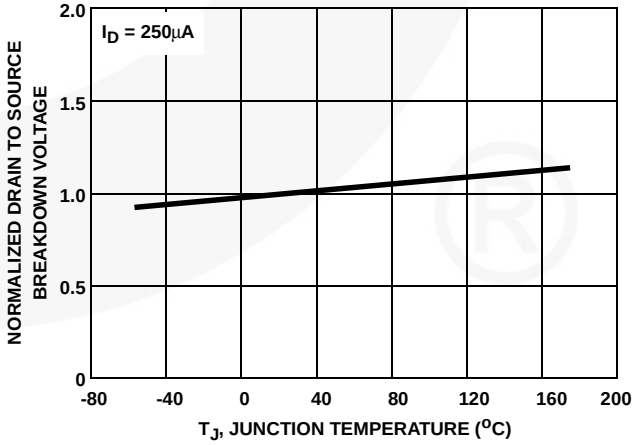

FIGURE 11. NORMALIZED DRAIN TO SOURCE BREAKDOWN VOLTAGE vs JUNCTION TEMPERATURE

©2005 Fairchild Semiconductor Corporation

Typical Performance Curves $T_C = 25^oC$, Unless Otherwise Specified **(Continued)**

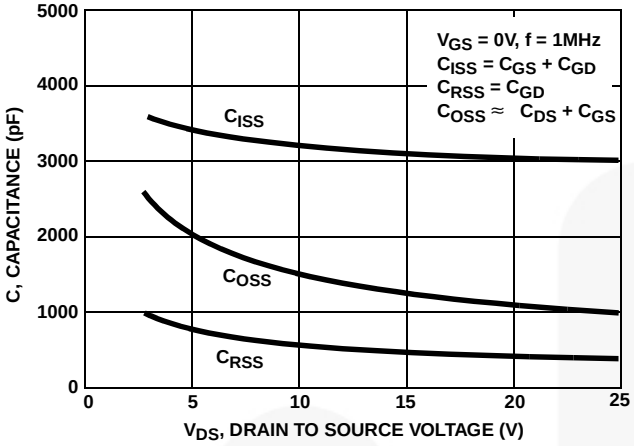

FIGURE 12. CAPACITANCE vs DRAIN TO SOURCE VOLTAGE

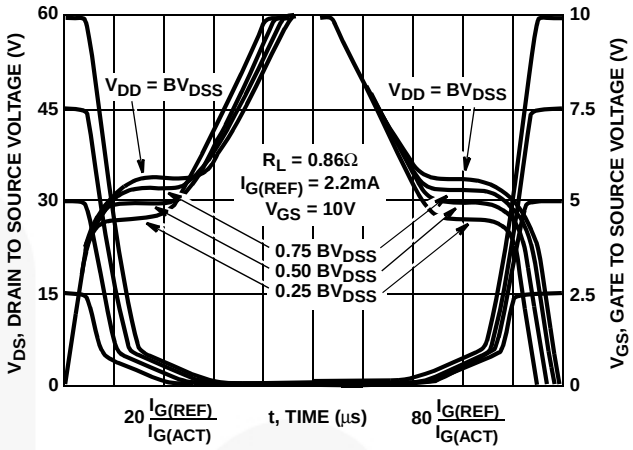

NOTE: Refer to Fairchild Application Notes AN7254 and AN7260.

FIGURE 13. NORMALIZED SWITCHING WAVEFORMS FOR CONSTANT GATE CURRENT

Test Circuits and Waveforms

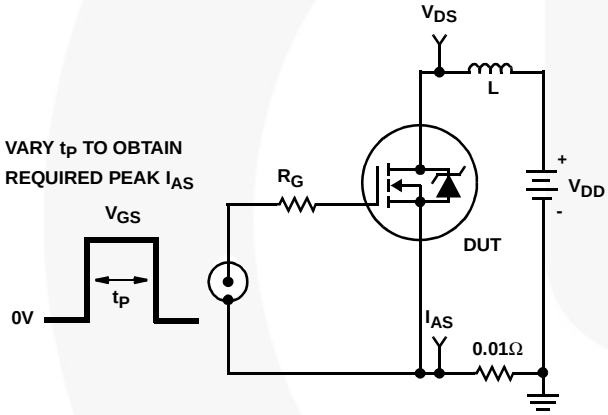

FIGURE 14. UNCLAMPED ENERGY TEST CIRCUIT

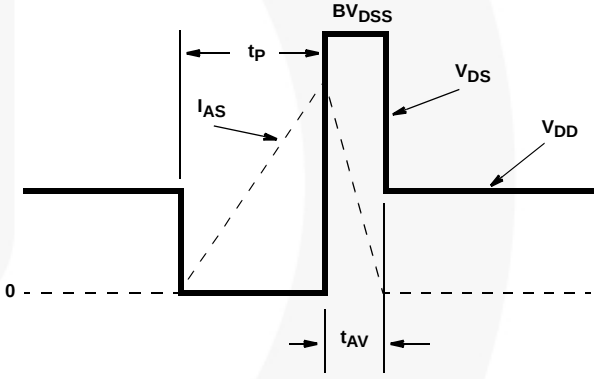

FIGURE 15. UNCLAMPED ENERGY WAVEFORMS

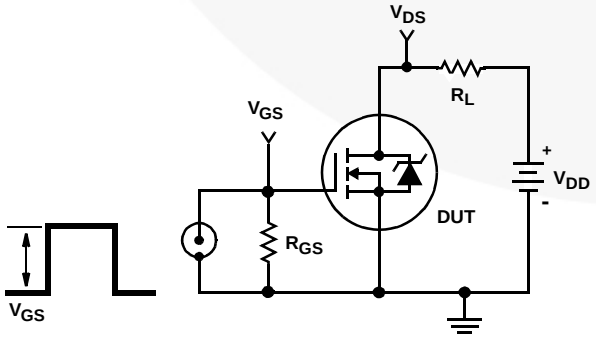

FIGURE 16. SWITCHING TIME TEST CIRCUIT

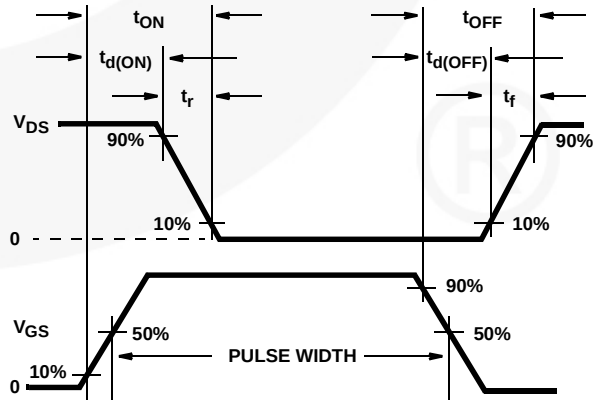

FIGURE 17. SWITCHING WAVEFORMS

©2005 Fairchild Semiconductor Corporation

Test Circuits and Waveforms (Continued)

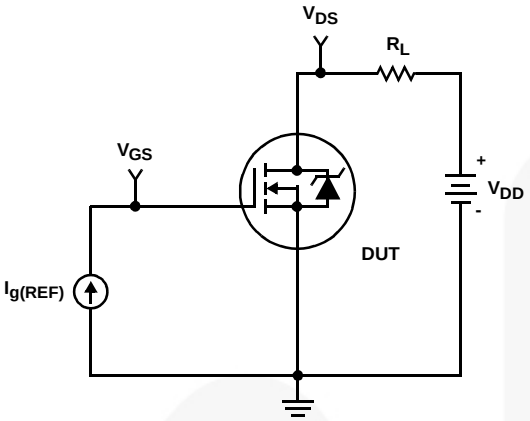

FIGURE 18. GATE CHARGE TEST CIRCUIT

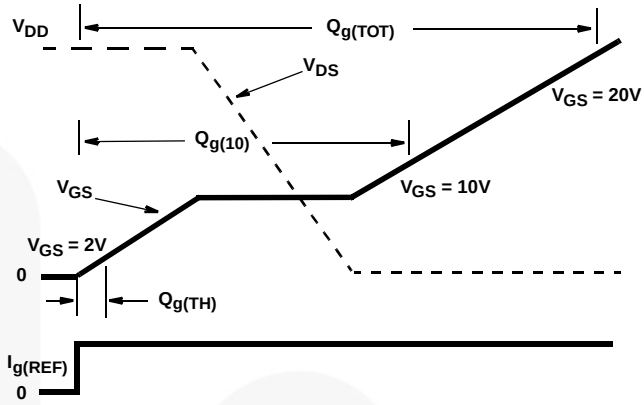

FIGURE 19. GATE CHARGE WAVEFORM

©2005 Fairchild Semiconductor Corporation

PSPICE Electrical Model

.SUBCKT RFG70N06 2 1 3 ; rev 3/20/92

CA 12 8 5.56e-9
CB 15 14 5.30e-9
CIN 6 8 2.63e-9

DBODY 7 5 DBDMOD
DBREAK 5 11 DBKMOD
DPLCAP 10 5 DPLCAPMOD

EBREAK 11 7 17 18 65.18
EDS 14 8 5 8 1
EGS 13 8 6 8 1
ESG 6 10 6 8 1
EVTO 20 6 18 8 1

IT 8 17 1

LDRAIN 2 5 1e-9
LGATE 1 9 3.10e-9
LSOURCE 3 7 1.82e-9

MOS1 16 6 8 8 MOSMOD M = 0.99
MOS2 16 21 8 8 MOSMOD M = 0.01

RBREAK 17 18 RBKMOD 1
RDRAIN 50 16 RDSMOD 4.66e-3
RLDRAIN 2 5 10
RGATE 9 20 1.21
RLGATE 1 9 31
RIN 6 8 1e9
RSOURCE 8 7 RDSMOD 3.92e-3
RLSOURCE 3 7 18.2
RVTO 18 19 RVTOMOD 1

S1A 6 12 13 8 S1AMOD
S1B 13 12 13 8 S1BMOD
S2A 6 15 14 13 S2AMOD
S2B 13 15 14 13 S2BMOD

VBAT 8 19 DC 1
VTO 21 6 0.605

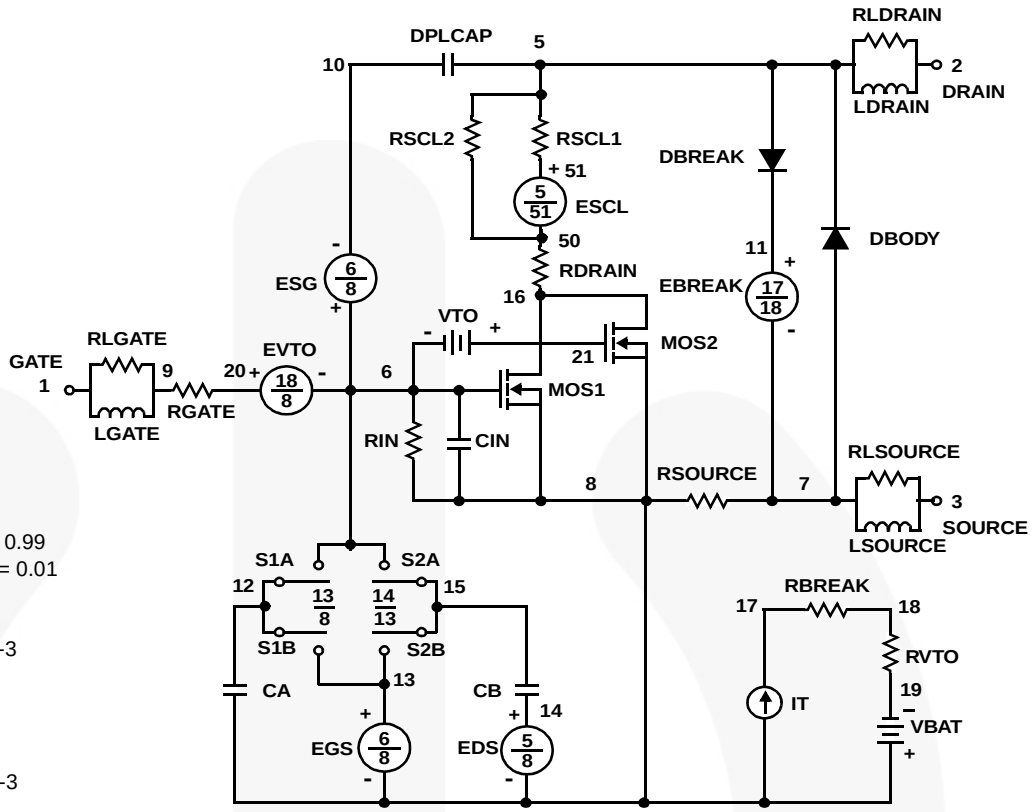

.MODEL DBDMOD D (IS = 7.91e-12 RS = 3.87e-3 TRS1 = 2.71e-3 TRS2 = 2.50e-7 CJO = 4.84e-9 TT = 4.51e-8)
.MODEL DBKMOD D (RS = 3.9e-2 TRS1 =1.05e-4 TRS2 = 3.11e-5)
.MODEL DPLCAPMOD D (CJO = 4.8e-9 IS = 1e-30 N = 10)
.MODEL MOSMOD NMOS (VTO = 3.46 KP = 47 IS = 1e-30 N = 10 TOX = 1 L = 1u W = 1u)
.MODEL RBKMOD RES (TC1 = 8.46e-4 TC2 = -8.48e-7)
.MODEL RDSMOD RES (TC1 = 2.23e-3 TC2 = 6.56e-6)
.MODEL RVTOMOD RES (TC1 = -3.29e-3 TC2 = 3.49e-7)
.MODEL S1AMOD VSWITCH (RON = 1e-5 ROFF = 0.1 VON = -8.35 VOFF= -6.35)
.MODEL S1BMOD VSWITCH (RON = 1e-5 ROFF = 0.1 VON = -6.35 VOFF= -8.35)
.MODEL S2AMOD VSWITCH (RON = 1e-5 ROFF = 0.1 VON = -2.0 VOFF= 3.0)
.MODEL S2BMOD VSWITCH (RON = 1e-5 ROFF = 0.1 VON = 3.0 VOFF= -2.0)

.ENDS

NOTE: For further discussion of the PSPICE model, consult **A New PSPICE Sub-circuit for the Power MOSFET Featuring Global Temperature Options**; written by William J. Hepp and C. Frank Wheatley.

©2005 Fairchild Semiconductor Corporation

FAIRCHILD SEMICONDUCTOR®

TRADEMARKS

The following includes registered and unregistered trademarks and service marks, owned by Fairchild Semiconductor and/or its global subsidiaries, and is not intended to be an exhaustive list of all such trademarks.

AccuPower™
AX-CAP®*
BitSiC™
Build it Now™
CorePLUS™
CorePOWER™
CROSSVOLT™
CTL™
Current Transfer Logic™
DEUXPEED®
Dual Cool™
EcoSPARK®
EfficentMax™
ESBC™
Fairchild®
Fairchild Semiconductor®
FACT Quiet Series™
FACT®
FAST®
FastvCore™
FETBench™
FPS™
F-PFS™
FRFET®
Global Power Resource℠
GreenBridge™
Green FPS™
Green FPS™ e-Series™
G*max*™
GTO™
IntelliMAX™
ISOPLANAR™
Marking Small Speakers Sound Louder and Better™
MegaBuck™
MICROCOUPLER™
MicroFET™
MicroPak™
MicroPak2™
MillerDrive™
MotionMax™
mWSaver®
OptoHiT™
OPTOLOGIC®
OPTOPLANAR®
PowerTrench®
PowerXS™
Programmable Active Droop™
QFET®
QS™
Quiet Series™
RapidConfigure™
Saving our world, 1mW/W/kW at a time™
SignalWise™
SmartMax™
SMART START™
Solutions for Your Success™
SPM®
STEALTH™
SuperFET®
SuperSOT™-3
SuperSOT™-6
SuperSOT™-8
SupreMOS®
SyncFET™
Sync-Lock™
SYSTEM GENERAL ®*
TinyBoost®
TinyBuck®
TinyCalc™
TinyLogic®
TINYOPTO™
TinyPower™
TinyPWM™
TinyWire™
TranSiC™
TriFault Detect™
TRUECURRENT®*
µSerDes™
UHC®
Ultra FRFET™
UniFET™
VCX™
VisualMax™
VoltagePlus™
XS™

*Trademarks of System General Corporation, used under license by Fairchild Semiconductor.

DISCLAIMER

FAIRCHILD SEMICONDUCTOR RESERVES THE RIGHT TO MAKE CHANGES WITHOUT FURTHER NOTICE TO ANY PRODUCTS HEREIN TO IMPROVE RELIABILITY, FUNCTION, OR DESIGN. FAIRCHILD DOES NOT ASSUME ANY LIABILITY ARISING OUT OF THE APPLICATION OR USE OF ANY PRODUCT OR CIRCUIT DESCRIBED HEREIN; NEITHER DOES IT CONVEY ANY LICENSE UNDER ITS PATENT RIGHTS, NOR THE RIGHTS OF OTHERS. THESE SPECIFICATIONS DO NOT EXPAND THE TERMS OF FAIRCHILD'S WORLDWIDE TERMS AND CONDITIONS, SPECIFICALLY THE WARRANTY THEREIN, WHICH COVERS THESE PRODUCTS.

LIFE SUPPORT POLICY

FAIRCHILD'S PRODUCTS ARE NOT AUTHORIZED FOR USE AS CRITICAL COMPONENTS IN LIFE SUPPORT DEVICES OR SYSTEMS WITHOUT THE EXPRESS WRITTEN APPROVAL OF FAIRCHILD SEMICONDUCTOR CORPORATION.

As used here in:

1. Life support devices or systems are devices or systems which, (a) are intended for surgical implant into the body or (b) support or sustain life, and (c) whose failure to perform when properly used in accordance with instructions for use provided in the labeling, can be reasonably expected to result in a significant injury of the user.
2. A critical component in any component of a life support, device, or system whose failure to perform can be reasonably expected to cause the failure of the life support device or system, or to affect its safety or effectiveness.

ANTI-COUNTERFEITING POLICY

Fairchild Semiconductor Corporation's Anti-Counterfeiting Policy. Fairchild's Anti-Counterfeiting Policy is also stated on our external website, www.Fairchildsemi.com, under Sales Support.

Counterfeiting of semiconductor parts is a growing problem in the industry. All manufactures of semiconductor products are experiencing counterfeiting of their parts. Customers who inadvertently purchase counterfeit parts experience many problems such as loss of brand reputation, substandard performance, failed application, and increased cost of production and manufacturing delays. Fairchild is taking strong measures to protect ourselves and our customers from the proliferation of counterfeit parts. Fairchild strongly encourages customers to purchase Fairchild parts either directly from Fairchild or from Authorized Fairchild Distributors who are listed by country on our web page cited above. Products customers buy either from Fairchild directly or from Authorized Fairchild Distributors are genuine parts, have full traceability, meet Fairchild's quality standards for handing and storage and provide access to Fairchild's full range of up-to-date technical and product information. Fairchild and our Authorized Distributors will stand behind all warranties and will appropriately address and warranty issues that may arise. Fairchild will not provide any warranty coverage or other assistance for parts bought from Unauthorized Sources. Fairchild is committed to combat this global problem and encourage our customers to do their part in stopping this practice by buying direct or from authorized distributors.

PRODUCT STATUS DEFINITIONS

Definition of Terms

Datasheet Identification	Product Status	Definition
Advance Information	Formative / In Design	Datasheet contains the design specifications for product development. Specifications may change in any manner without notice.
Preliminary	First Production	Datasheet contains preliminary data; supplementary data will be published at a later date. Fairchild Semiconductor reserves the right to make changes at any time without notice to improve design.
No Identification Needed	Full Production	Datasheet contains final specifications. Fairchild Semiconductor reserves the right to make changes at any time without notice to improve the design.
Obsolete	Not In Production	Datasheet contains specifications on a product that is discontinued by Fairchild Semiconductor. The datasheet is for reference information only.

Rev. I66

©2005 Fairchild Semiconductor Corporation

ON Semiconductor and ON are trademarks of Semiconductor Components Industries, LLC dba ON Semiconductor or its subsidiaries in the United States and/or other countries. ON Semiconductor owns the rights to a number of patents, trademarks, copyrights, trade secrets, and other intellectual property. A listing of ON Semiconductor's product/patent coverage may be accessed at www.onsemi.com/site/pdf/Patent−Marking.pdf. ON Semiconductor reserves the right to make changes without further notice to any products herein. ON Semiconductor makes no warranty, representation or guarantee regarding the suitability of its products for any particular purpose, nor does ON Semiconductor assume any liability arising out of the application or use of any product or circuit, and specifically disclaims any and all liability, including without limitation special, consequential or incidental damages. Buyer is responsible for its products and applications using ON Semiconductor products, including compliance with all laws, regulations and safety requirements or standards, regardless of any support or applications information provided by ON Semiconductor. "Typical" parameters which may be provided in ON Semiconductor data sheets and/or specifications can and do vary in different applications and actual performance may vary over time. All operating parameters, including "Typicals" must be validated for each customer application by customer's technical experts. ON Semiconductor does not convey any license under its patent rights nor the rights of others. ON Semiconductor products are not designed, intended, or authorized for use as a critical component in life support systems or any FDA Class 3 medical devices or medical devices with a same or similar classification in a foreign jurisdiction or any devices intended for implantation in the human body. Should Buyer purchase or use ON Semiconductor products for any such unintended or unauthorized application, Buyer shall indemnify and hold ON Semiconductor and its officers, employees, subsidiaries, affiliates, and distributors harmless against all claims, costs, damages, and expenses, and reasonable attorney fees arising out of, directly or indirectly, any claim of personal injury or death associated with such unintended or unauthorized use, even if such claim alleges that ON Semiconductor was negligent regarding the design or manufacture of the part. ON Semiconductor is an Equal Opportunity/Affirmative Action Employer. This literature is subject to all applicable copyright laws and is not for resale in any manner.

PUBLICATION ORDERING INFORMATION

LITERATURE FULFILLMENT:
Literature Distribution Center for ON Semiconductor
19521 E. 32nd Pkwy, Aurora, Colorado 80011 USA
Phone: 303−675−2175 or 800−344−3860 Toll Free USA/Canada
Fax: 303−675−2176 or 800−344−3867 Toll Free USA/Canada
Email: orderlit@onsemi.com

N. American Technical Support: 800−282−9855 Toll Free USA/Canada
Europe, Middle East and Africa Technical Support:
Phone: 421 33 790 2910
Japan Customer Focus Center
Phone: 81−3−5817−1050

ON Semiconductor Website: **www.onsemi.com**

Order Literature: http://www.onsemi.com/orderlit

For additional information, please contact your local Sales Representative