RFFM8505

4.9GHz to 5.85GHz 802.11a/n/ac WiFi Front End Module



Package: QFN, 16-pin,
2.5mm x 2.5mm x 0.40mm

The RFFM8505 provides a complete integrated solution in a single front end module (FEM) for WiFi 802.11a/n/ac systems. The ultra-small factor and integrated matching minimizes layout area in the customer's application and greatly reduces the number of external components. This simplifies the total front end solution by reducing the bill of materials, system footprint, and manufacturing cost. The RFFM8505 integrates a 5 GHz power amplifier (PA), single pole double throw switch (SP2T), LNA with bypass, and a power detector coupler for improved accuracy. The device is provided in a 2.5mm x 2.5mm x 0.40mm, 16-pin QFN package. This module meets or exceeds the RF front end needs of IEEE 802.11a/n/ac WiFi RF systems.

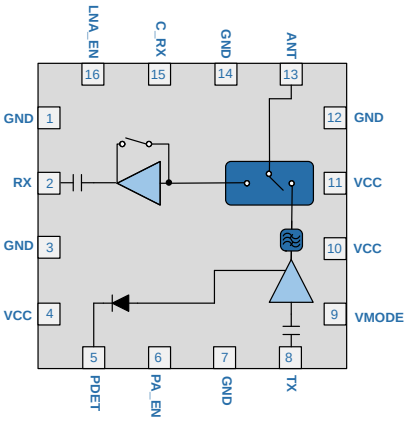

Functional Block Diagram

Features

- P_{OUT}=17.5dBm, 11ac, 80MHz 1.5% (-36.5dB) EVM
- P_{OUT}=19.5dBm, 11n 20MHz 2.5% (-32dB) EVM
- Input and Output Matched to 50Ω
- Integrated 5GHz PA, SP2T Switch, LNA, and PDET
- Low Height Package, Suited for SiP and CoB designs
- Supports low power mode for improved efficiency

Applications

- Cellular Handsets
- Mobile Devices
- Tablets
- Consumer Electronics
- Gaming
- Netbooks/Notebooks
- TV/Monitors/Video

Ordering Information

RFFM8505SB	Standard 5-piece sample bag
RFFM8505SQ	Standard 25-piece sample bag
RFFM8505SR	Standard 100-piece reel
RFFM8505TR7	Standard 2500-piece reel
RFFM8505PCK-410	Fully assembled evaluation board w/ 5-piece bag

RF Micro Devices Inc. 7628 Thorndike Road, Greensboro, NC 27409-9421
For sales or technical support, contact RFMD at +1.336.678.5570 or customerservice@rfmd.com.

DS131106

RF MICRO DEVICES® and RFMD® are trademarks of RFMD, LLC. BLUETOOTH is a trademark owned by Bluetooth SIG, Inc., U.S.A. and licensed for use by RFMD. All other trade names, trademarks, and registered trademarks are the property of their respective owners. ©2013, RF Micro Devices, Inc.

Absolute Maximum Ratings

Parameter	Rating	Unit
DC Supply Voltage (No RF Applied)	6	V
PA Enable Voltage	-0.5 to 5	V_{DC}
DC Supply Current	500	mA
Operating Temperature Range	-40 to +85	ºC
Storage Temperature	-40 to +150	ºC
Maximum TX Input Power into 50Ω Load for 11a/n/ac (No Damage)	+12	dBm
LNA On Maximum RX input power (No damage)	+12	dBm
Bypass Mode Maximum RX input power (No damage)	+25	dBm
Moisture Sensitivity	MSL2	

Caution! ESD sensitive device.

RFMD Green: RoHS status based on EU Directive 2011/65/EU (at time of this document revision), halogen free per IEC 61249-2-21, < 1000ppm each of antimony trioxide in polymeric materials and red phosphorus as a flame retardant, and <2% antimony in solder.

Exceeding any one or a combination of the Absolute Maximum Rating conditions may cause permanent damage to the device. Extended application of Absolute Maximum Rating conditions to the device may reduce device reliability. Specified typical performance or functional operation of the device under Absolute Maximum Rating conditions is not implied.

Nominal Operating Parameters

Parameter	Specification			Unit	Condition
	Min	Typ	Max		
Compliance					**802.11a, 802.11n, 802.11ac**
Operating Frequency	5.15		5.825	GHz	
Extended Frequency	4.9		5.85	GHz	Functional with reduced performance -3dB lower TX power
Operating Temperature	-10		70	ºC	
Extended Operating Temperature	-40		85	ºC	Functional with reduced performance
Power Supply V_{CC}	3.2	3.6	4.6	V	
Extended V_{CC}	3		5.0	V	Please see 5 volts apps schematic
Control Voltage-high	2.8	3.1	V_{CC}	V	PA_EN, C_RX, LNA_EN, V_{MODE}. Should not exceed V_{CC} voltage
Control Voltage-low		0	0.4	V	
Transmit (TX-ANT) High Power Mode					**T= -10°C to +70°C, V_{CC}=3.2V to 4.6V, 50% Duty Cycle unless otherwise noted**
HT80 Output Power	17.0	17.5		dBm	T= 25°C, V_{CC}= 3.6V
80MHz 802.11ac - Dynamic EVM		1.5	1.8	%	
		-36.5	-35.0	dB	
HT80 Output Power		16.0		dBm	T= -10°C to +70°C, V_{CC}=3.2V to 4.6V
80MHz 802.11ac - Dynamic EVM		1.5	1.8	%	
		-36.5	-35.0	dB	
HT20 Output Power	19.0	19.5		dBm	T= 25°C, V_{CC}= 3.6V
20MHz 802.11n - Dynamic EVM		2.5	3	%	
		-32	-30.5	dB	
HT20 Output Power		18.0		dBm	T= -10°C to +70°C, V_{CC}=3.2V to 4.6V
20MHz 802.11n - Dynamic EVM		2.5	3	%	
		-32	-30.5	dB	
20/80MHz 802.11ac - Spectral Mask		22		dBm	T= 25°C, V_{CC}= 3.6V
40MHz 802.11n - Spectral Mask		21		dBm	
TX Port Return Loss	10	18		dB	
ANT Port Return Loss	10	18		dB	
Large Signal Gain	24	28	31	dB	T= 25°C, V_{CC}= 3.6V
	23	28	31	dB	T= -10°C to +70°C, V_{CC}=3.2V to 4.6V
Gain flatness over any 80MHz BW	-0.5		0.5	dB	

The information in this publication is believed to be accurate. However, no responsibility is assumed by RF Micro Devices, Inc. ("RFMD") for its use, nor for any infringement of patents or other rights of third parties resulting from its use. No license is granted by implication or otherwise under any patent or patent rights of RFMD. RFMD reserves the right to change component circuitry, recommended application circuitry and specifications at any time without prior notice.

Parameter	Specification			Unit	Condition
	Min	Typ	Max		
Transmit (TX-ANT) High Power Mode (continued)					**T= -10°C to +70°C, VCC=3.2V to 4.6V, 50% Duty Cycle unless otherwise noted**
Gain flatness across band	-1		1	dB	
Operating Current		230		mA	P_{OUT}= 17.5dBm, T= 25°C, V_{CC}= 3.6V
		215	270	mA	P_{OUT}= 16dBm, T= -10 to +70C, V_{CC}=3.2V to 4.6V
		260		mA	P_{OUT}= 19.5dBm, T= 25°C, V_{CC}= 3.6V
		235	300	mA	P_{OUT}= 18dBm, T= -10 to +70C, V_{CC}=3.2V to 4.6V
Quiescent current		165		mA	RF= Off, T= 25°C, V_{CC}= 3.6V
PA_EN Current		70	150	uA	
Second Harmonic		-45	-40	dBm/MHz	P_{OUT}= 18dBm, T= 25°C, V_{CC}= 3.6V, 6Mbps 802.11a
Third Harmonic		-45	-38	dBm/MHz	
Power Detector Voltage	0.28	0.32	0.37	V	P_{OUT}= 0dBm, T= 25°C
Power Detector Nominal 5210MHz	0.75		0.95	V	P_{OUT}= 17.5dBm, T= 25°C, V_{CC}= 3.6V
Power Detector Nominal 5775MHz	0.7		0.88	V	
Power Detector Voltage	0.8	0.95	1.2	V	P_{OUT}= 20dBm
Variation from 0-360° load pull	-1.5		1.5	dB	3:1 VSWR
ANT-RX Isolation (TX Mode-TX enabled and maximum power)		28		dB	
Transmit (TX-ANT) Low Power Mode					**T= 25°C, V_{CC}= 3.6V,50% Duty Cycle unless otherwise noted**
HT80 Output Power		11.0		dBm	T = 25°C, V_{CC} = 3.6V
80MHZ 802.11ac Dynamic EVM		1.5	1.8	%	
		-36.5	-35.0	dB	
HT20 Output Power		13.0		dBm	T = 25°C, V_{CC} = 3.6V
20MHz 802.11n Dynamic EVM		2.5	3	%	
		-32.0	-30.5	dB	
TX Performance – Spectral Mask					
40MHz 802.11n Output Power		12		dBm	T = 25°C, V_{CC} = 3.6V
20/ 80MHz 802.11ac Output Power		14		dBm	
Operating Current		150	180	mA	P_{OUT}= 11dBm for 11ac
		170	200	mA	P_{OUT}= 13dBm for 11n
V_{MODE} Control Line Current		160	500	µA	
Large Signal Gain		25		dB	P_{OUT}= 12dBm
Large Signal Gain	23	25		dB	T= -10 to +70C, V_{CC}=3.2V to 4.6V
Gain flatness over any 80MHz BW	-0.5		0.5	dB	

The information in this publication is believed to be accurate. However, no responsibility is assumed by RF Micro Devices, Inc. ("RFMD") for its use, nor for any infringement of patents or other rights of third parties resulting from its use. No license is granted by implication or otherwise under any patent or patent rights of RFMD. RFMD reserves the right to change component circuitry, recommended application circuitry and specifications at any time without prior notice.

Parameter	Specification			Unit	Condition
	Min	Typ	Max		
Receive (ANT-RX)-LNA On					**Freq = 5.15GHz to 5.825GHz, T = -10°C to +70°C, V_{CC}=3.2V to 5.0V, unless otherwise noted.**
Gain	9	12	15	dB	T= 25°C, V_{CC}= 3.6V
	8	12	16	dB	
Gain flatness over any 80MHz BW	-0.5		0.5	dB	T= 25°C, V_{CC}= 3.6V
Gain flatness across band	-1		1	dB	
Noise Figure		2.5	3	dB	T= 25°C, V_{CC}= 3.6V
		2.5	3.5	dB	
Rx Port Return Loss	10	20		dB	
ANT Port Return Loss	10	15		dB	
Nominal Input P1dB	-5	-3		dBm	T= 25°C, V_{CC}= 3.6V
Current Consumption		10	16	mA	
LNA_EN Control Current		130	200	µA	
LNA Turn On Time		400	600	nS	
Receive (ANT-RX)-Bypass Mode					**T= -10°C to +70°C, V_{CC}= 3.2V to 5.0V, unless otherwise noted**
LNA Bypass Current		0.5		µA	
Nominal Insertion Loss	5	8	11	dB	T= 25°C, V_{CC}= 3.6V
RX Port Return Loss	8	15		dB	
ANT Port Return Loss	10	20		dB	
Nominal Input P1dB	15	20		dBm	T= 25°C, V_{CC}= 3.6V
General Specifications					
Control Line Impedance-PA_EN		75		kΩ	
Control Line Impedance-LNA_EN		78		kΩ	
Control Line Impedance-C_RX		27		MΩ	
Switch Control Current – High - Each Line		5	100	µA	
Switch Control Current – Low - Each Line		0.5	2	µA	
Switching Speed		100	500	ns	
ESD – Human Body Model		1000		V	
PA Turn-on Time		200	500	ns	10% to 90%
PA Stability			20	dBm	No spurious above -41.25dBm/MHz
Maximum Input Power			12	dBm	Into 50Ω, V_{CC}= 3.3V, 25°C
			12	dBm	6:1 VSWR, V_{CC}= 3.3V, 25°C
			5	dBm	10:1 VSWR, V_{CC}= 3.3V, 25°C
Leakage Current	0	2	10	uA	V_{CC}= 4.8V, T= 25°C, RF OFF, All control lines floating
Transmit (TX-ANT) High Power Mode at 5V					**Freq = 5.15GHz to 5.825GHz, V_{CC}= 5.0V, T= +25°C, 50% Duty Cycle, unless otherwise noted.**
Output Power		19.0		dBm	T= 25°C, V_{CC}= 5.0V
80MHz 802.11ac Dynamic EVM		1.5	1.8	%	
		-36.5	-35.0	dB	
Output Power		20		dBm	T= 25°C, V_{CC}= 5.0V
20MHz 802.11n Dynamic EVM		2.5	3	%	
		-32.0	-30.5	dB	
Large Signal Gain	23	28		dB	
Operation Current		270		mA	P_{OUT}= 19dBm
		285		mA	P_{OUT}= 20dBm
Quiescent current		200		mA	RF = Off

The information in this publication is believed to be accurate. However, no responsibility is assumed by RF Micro Devices, Inc. ("RFMD") for its use, nor for any infringement of patents or other rights of third parties resulting from its use. No license is granted by implication or otherwise under any patent or patent rights of RFMD. RFMD reserves the right to change component circuitry, recommended application circuitry and specifications at any time without prior notice.

Switch Control Logic Truth Table

Operating Mode	PA_EN	LNA_EN	C_RX	V_{MODE}
Standby	Low	Low	Low	Low
802.11a/n/ac TX High Power	High	Low	Low	Low
802.11a/n/ac TX Low Power	High	Low	Low	High
802.11a/n/ac RX Gain	Low	High	High	Low
802.11a/n/ac RX Bypass	Low	Low	High	Low

Notes:

- PA_EN and TX switch control are tied together internally.
- High = 2.8 to V_{CC}. Low = 0V to 0.2V

Evaluation Board Schematic

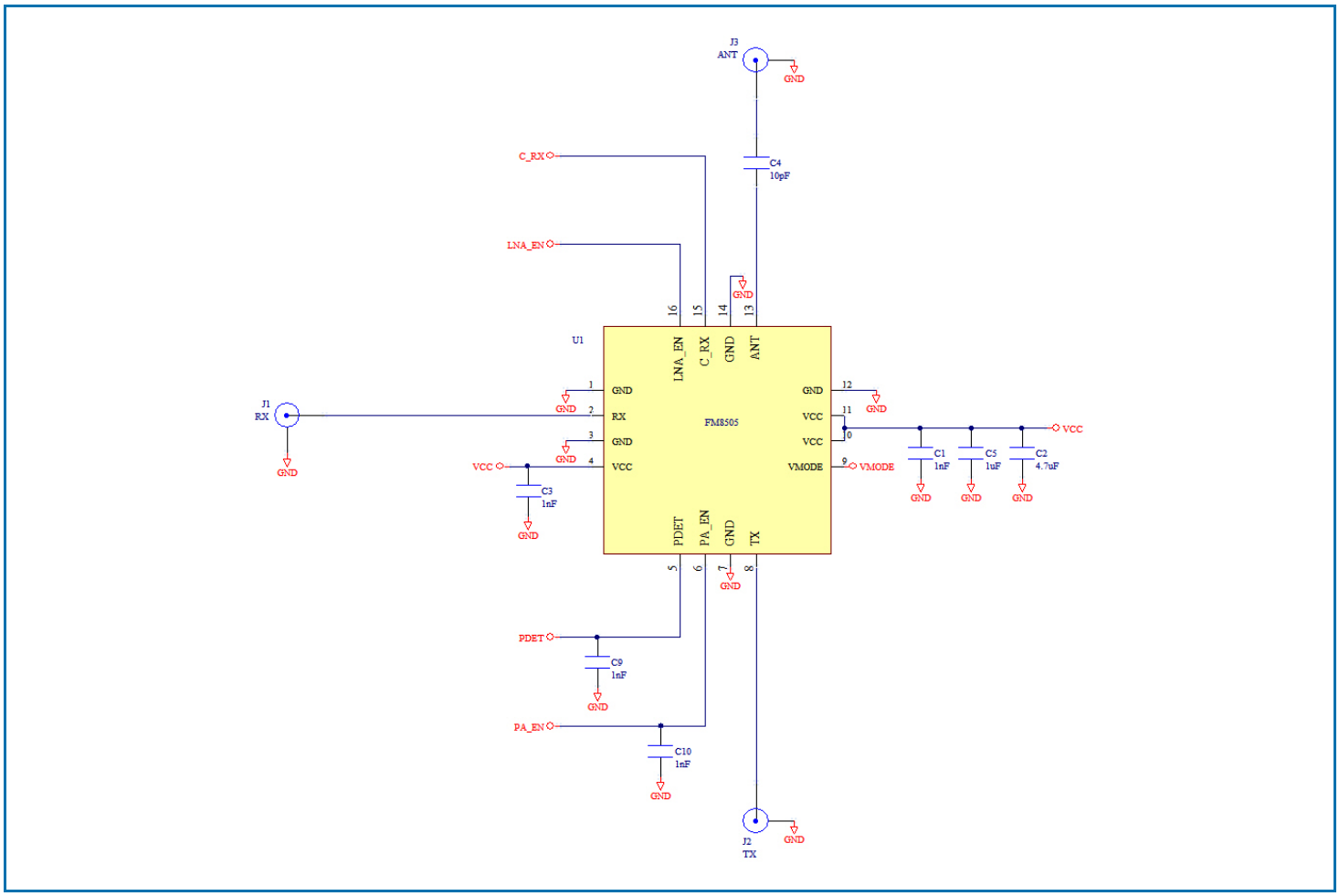

The information in this publication is believed to be accurate. However, no responsibility is assumed by RF Micro Devices, Inc. ("RFMD") for its use, nor for any infringement of patents or other rights of third parties resulting from its use. No license is granted by implication or otherwise under any patent or patent rights of RFMD. RFMD reserves the right to change component circuitry, recommended application circuitry and specifications at any time without prior notice.

5V Evaluation Board Schematic

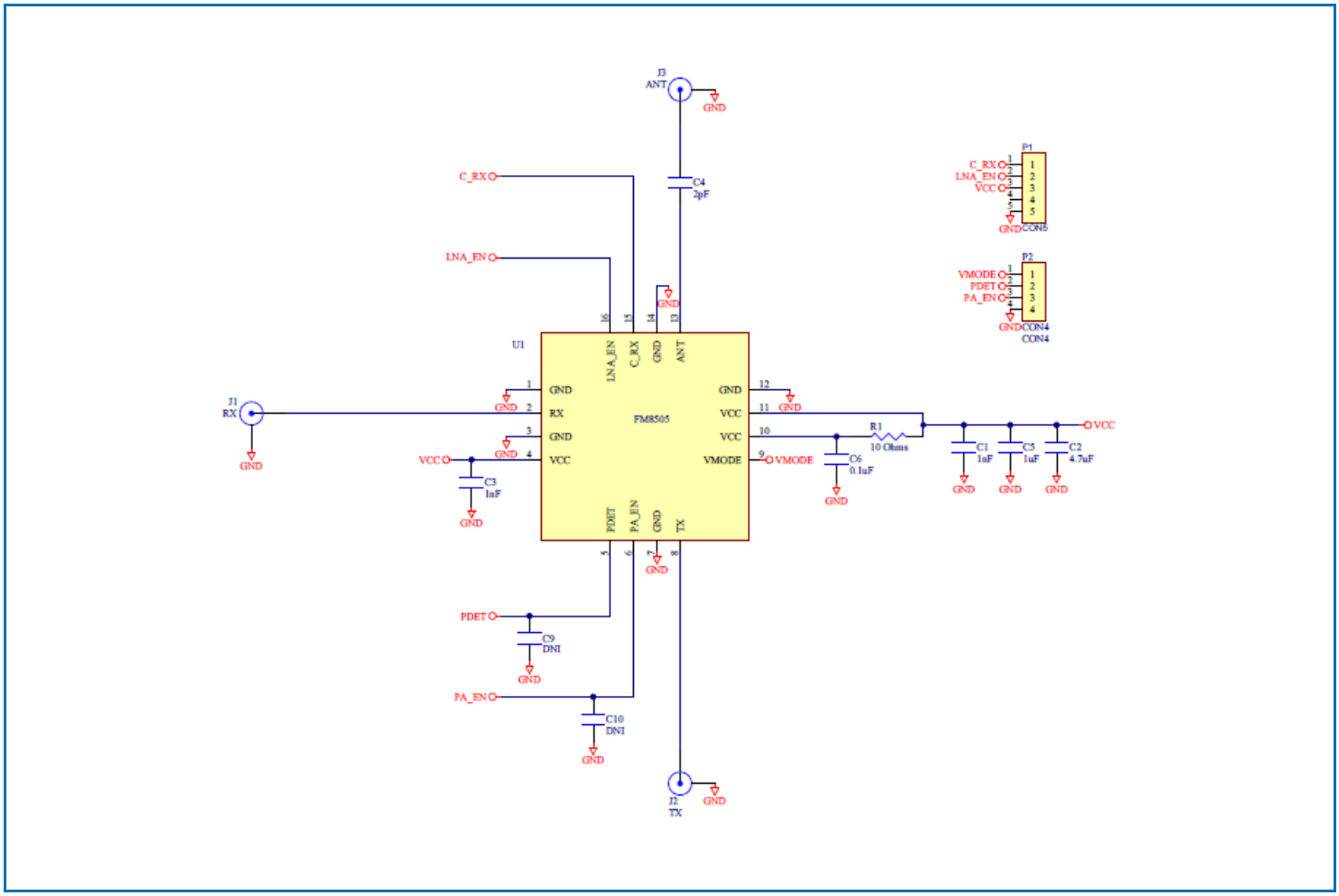

The information in this publication is believed to be accurate. However, no responsibility is assumed by RF Micro Devices, Inc. ("RFMD") for its use, nor for any infringement of patents or other rights of third parties resulting from its use. No license is granted by implication or otherwise under any patent or patent rights of RFMD. RFMD reserves the right to change component circuitry, recommended application circuitry and specifications at any time without prior notice.

Pin Out

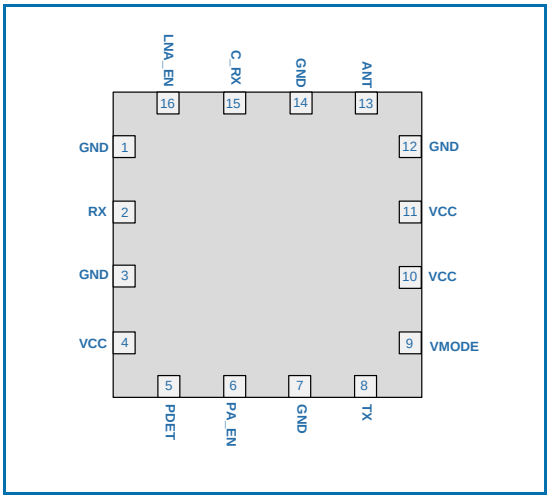

Package Outline and Branding Drawing (Dimensions in millimeters)

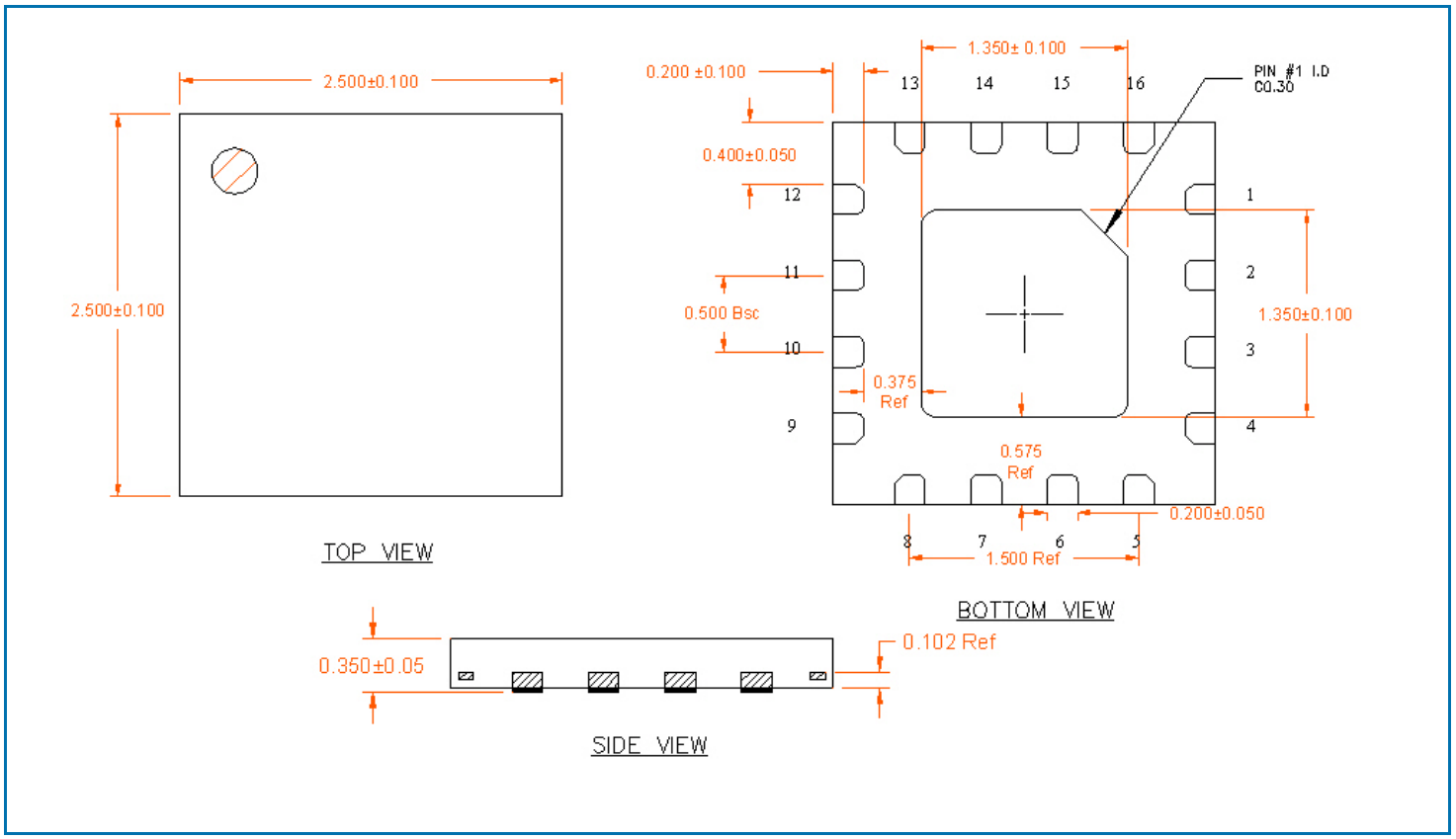

The information in this publication is believed to be accurate. However, no responsibility is assumed by RF Micro Devices, Inc. ("RFMD") for its use, nor for any infringement of patents or other rights of third parties resulting from its use. No license is granted by implication or otherwise under any patent or patent rights of RFMD. RFMD reserves the right to change component circuitry, recommended application circuitry and specifications at any time without prior notice.

PCB Patterns

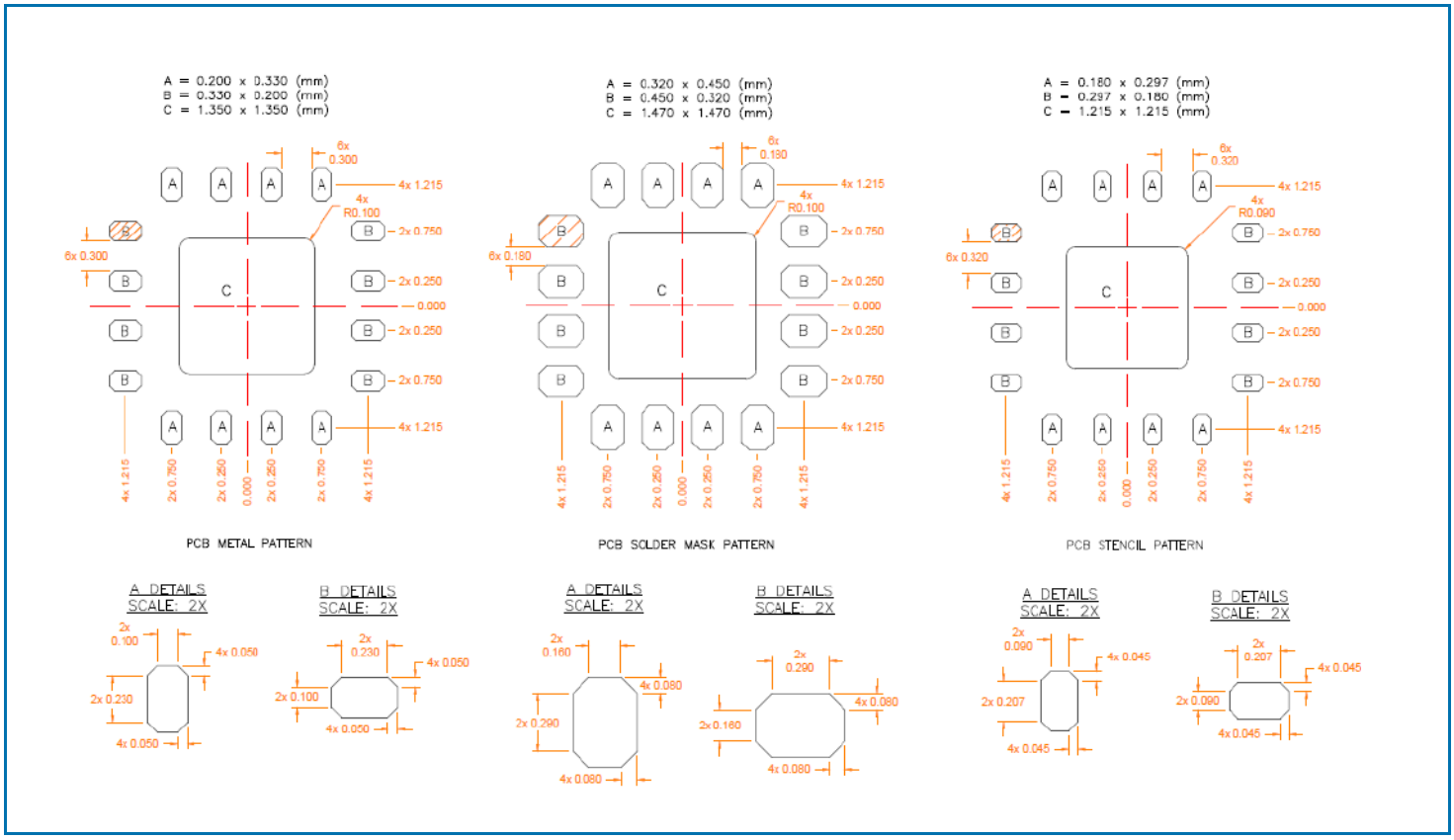

Notes:
1. Thermal vias for center slug “C” should be incorporated into the PCB design. The number and size of thermal vias will depend on the application, power, dissipation and electrical requirements. Example of the number and size of vias can be found on the RFMD evaluation board layout (gerber files are available upon request)

The information in this publication is believed to be accurate. However, no responsibility is assumed by RF Micro Devices, Inc. ("RFMD") for its use, nor for any infringement of patents or other rights of third parties resulting from its use. No license is granted by implication or otherwise under any patent or patent rights of RFMD. RFMD reserves the right to change component circuitry, recommended application circuitry and specifications at any time without prior notice.

Pin Names and Descriptions

Pin	Name	Description
1	GND	Ground connection. This pin is not connected internally and can be left floating or connected to ground.
2	RX	RF output port for the 802.11a/n/ac LNA. This port is matched to 50Ω and DC blocked internally.
3	GND	This pin is not connected internally and can be left floating or connected to ground.
4	VCC	Supply voltage for the LNA and PA Regulator. See applications schematic for biasing and bypassing components.
5	PDET	Power detector voltage for the TX path. May need external series R/shunt C to adjust voltage level and to filter RF noise.
6	PA_EN	Control voltage for the PA and TX switch. See truth table for proper settings.
7	GND	This pin is not connected internally and can be left floating or connected to ground.
8	TX	RF input port for the 802.11a/n/ac PA. Input is matched to 50Ω and DC blocked internally
9	VMODE	High/Low power mode control signal. V_{MODE} can be low or floating for nominal conditions (high power mode). Applying 2.8V or greater to this pin enables low power mode.
10	VCC	Supply voltage for the first and second stage of the PA. See applications schematic for biasing and bypassing components.
11	VCC	Supply voltage for the final stage of the PA. See applications schematic for biasing and bypassing components.
12	GND	This pin is not connected internally and can be left floating or connected to ground.
13	ANT	RF bidirectional antenna port matched to 50Ω. An External DC block is required
14	GND	This pin is not connected internally and can be left floating or connected to ground.
15	C_RX	Receive switch control pin. See switch truth table for proper level.
16	LNA_EN	Control voltage for the LNA. When this pin is set to a LOW logic state, the bypass mode is enabled.
Pkg Base	GND	Ground connection. The backside of the package should be connected to the ground plane through a short path, i.e., PCB vias under the device are recommended.

RF Micro Devices Inc. 7628 Thorndike Road, Greensboro, NC 27409-9421
For sales or technical support, contact RFMD at +1.336.678.5570 or customerservice@rfmd.com.
DS131106
The information in this publication is believed to be accurate. However, no responsibility is assumed by RF Micro Devices, Inc. ("RFMD") for its use, nor for any infringement of patents or other rights of third parties resulting from its use. No license is granted by implication or otherwise under any patent or patent rights of RFMD. RFMD reserves the right to change component circuitry, recommended application circuitry and specifications at any time without prior notice.