RFMD
rfmd.com

RFFM4501E

3.3V, 4.9GHz to 5.85GHz 802.11a/n/ac Front End Module

Package: Laminate, 16-pin, 3.0mm x 3.0mm x 1.05mm



Features

- Integrated 4.9GHz to 5.85GHz Amplifier, SPDT Tx/Rx Switch, LNA with Bypass, and Power Detector Coupler
- P_{OUT} = 16dBm, 11ac HT80 MCS9, 1.8% Dynamic EVM
- P_{OUT} = 20dBm, MCS0 HT20-HT80 Spectral Mask Compliant

Applications

- IEEE802.11a/n/ac WiFi Applications
- 4.9GHz to 5.85GHz ISM Band Applications
- Portable Battery-Powered Equipment
- WiFi Access Points, Gateways and Set Top Boxes

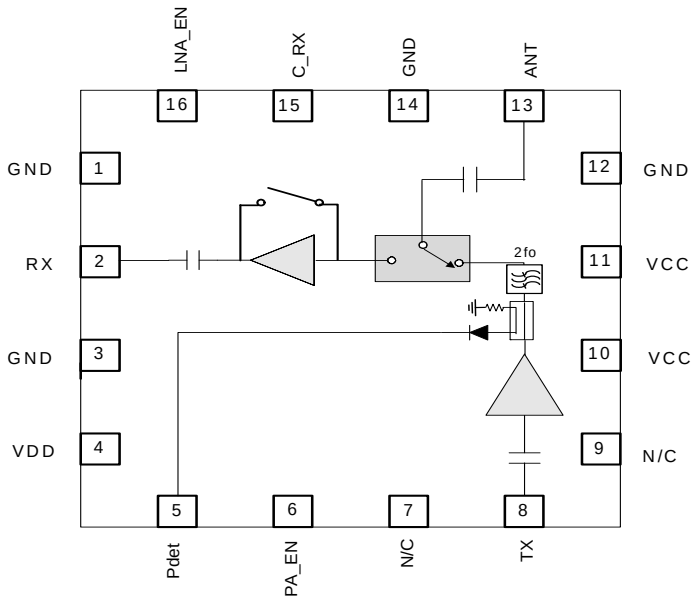

Functional Block Diagram

Product Description

The RFFM4501E provides a complete integrated solution in a single front end module (FEM) for WiFi 802.11a/n/ac systems. The ultra-small form factor and integrated matching minimizes the layout area in the customer's application and greatly reduces the number of external components. This simplifies the total front end solution by reducing the bill of materials, system footprint, and manufacturability cost. The RFFM4501E integrates a power amplifier (PA), single pole double throw switch (SPDT), LNA with bypass, and a power detector coupler for improved accuracy. The device is provided in a 3mm x 3mm x 1.05mm, 16-pin laminate package. This module meets or exceeds the RF front end needs of IEEE 802.11a/n/ac WiFi RF systems.

Ordering Information

RFFM4501EPCK-410	RFFM4501E Eval Board with 5-piece bag
RFFM4501ESB	5-Piece bag
RFFM4501ESR	100-Piece reel
RFFM4501ETR7	2500-Piece reel
RFFM4501ESQ	25-Piece bag

Optimum Technology Matching® Applied

☐ GaAs HBT	☐ SiGe BiCMOS	☑ GaAs pHEMT	☐ GaN HEMT
☐ GaAs MESFET	☐ Si BiCMOS	☐ Si CMOS	☐ BiFET HBT
☑ InGaP HBT	☐ SiGe HBT	☐ Si BJT	☐ SOI

RF MICRO DEVICES®, RFMD®, Optimum Technology Matching®, Enabling Wireless Connectivity™, PowerStar®, POLARIS™ TOTAL RADIO™ and UltimateBlue™ are trademarks of RFMD, LLC. BLUETOOTH is a trademark owned by Bluetooth SIG, Inc., U.S.A. and licensed for use by RFMD. All other trade names, trademarks and registered trademarks are the property of their respective owners. ©2012, RF Micro Devices, Inc.

7628 Thorndike Road, Greensboro, NC 27409-9421 · For sales or technical support, contact RFMD at **(+1) 336-678-5570** or **customerservice@rfmd.com**.

RFMD
rfmd.com

Please contact
RFMD Technical Support
at (336) 678-5570
for more information.

7628 Thorndike Road, Greensboro, NC 27409-9421 · For sales or technical support, contact RFMD at (+1) 336-678-5570 or sales-support@rfmd.com.