Rev	AWO #	Description	Date	Appr
-	9887	RELEASED	11/20/09	

APPROVED: _____

DATE: _____ TITLE: _____

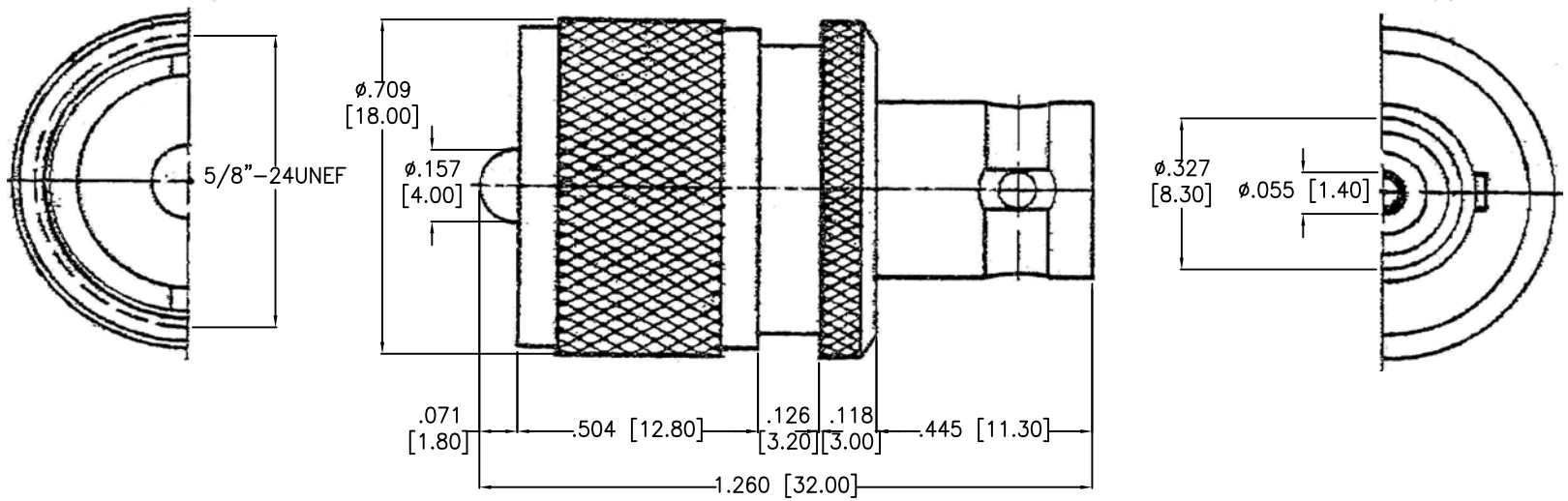

DESCRIPTION	MATERIAL	QTY
WASHER	BRASS	1
WASHER	BRASS	1
INSULATOR	DELRIN	1
PIN	BRASS	1
BODY	BRASS	1
SHELL	BRASS	1

SPECIFICATIONS:

Electrical:
Impedance: 50 ohms
Frequency range: 0–200 MHz
Working Voltage: 500 VRMS max.
Dielectric Withstanding Voltage: 1500 VRMS min.
Contact Resistance: 3 Milliohms max. (Center Contact)
2 Milliohms max. (Outer Contact)
Insulator Resistance: 5000 Megohms min.
Environmental:
Lead free, RoHS compliant.

RoHS COMPLIANT

UNLESS OTHERWISE SPECIFIED
ALL DIMENSIONS ARE INCHES [MM]
TOLERANCES: EXCEPT AS NOTED

INCHES		HOLES	
.X	± .10	Ø.X	±.10
.XX	± .020	Ø.XX	±.015
.XXX	± .015	Ø.XXX	±.010

APPROVALS		DATE
DRAWN	DY	11/20/09
CHECKED		
APPROVED		

ADAM TECH
909 Rahway Avenue, Union, NJ 07083
Phone: 908-687-5000 Fax: 908-687-5710

TITLE: UHF MALE TO BNC FEMALE

SIZE	PART NO.	REV.
X	RF6-20-D-AS-50	-

REF: S00049T | SCALE: NTS | SHEET 1 OF 1