RFMD
rfmd.com

RF5540

4.9GHz TO 5.85GHz SWITCH AND LNA FRONT END SOLUTION

Package: QFN, 12-Pin, 2.0mmx2.0mmx0.5mm



Features

- Single Supply Voltage 2.7V to 4.8V
- Integrated 5GHz LNA With Bypass and SPDT

Applications

- IEEE802.11a WiFi Applications
- Consumer Electronics
- Mobile Devices
- Gaming
- General Purpose Switch and LNA Solution for 4.9GHz to 5.85GHz Frequency Range

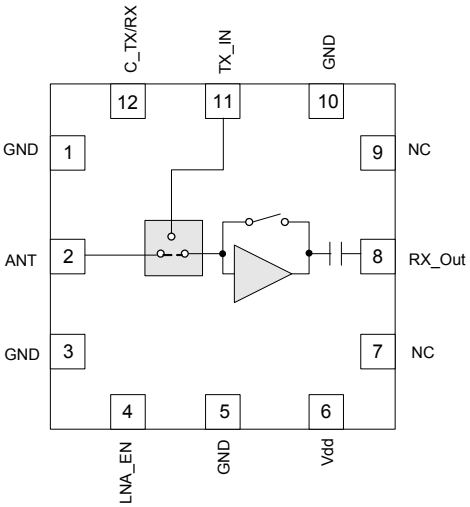

Functional Block Diagram

Product Description

The RF5540 is designed specifically for high-performance WiFi applications in the 5GHz ISM band. This module integrates the LNA with bypass and an SPDT switch of a Front End solution. The integrated input and output match reduces the number of external components keeping cost down and utilizing minimum layout area for implementation. The RF5540 is provided in a 2mmx2mmx0.5mm, 12-pin QFN package. This LNA + Switch front-end solution meets or exceeds the specification requirements of IEEE 802.11a RF systems.

Ordering Information

RF5540SB	5-Piece Bag
RF5540SQ	25-Piece Bag
RF5540SR	Standard 100-Piece Bag
RF5540TR7	Standard 2500-Piece Reel
RF5540PCK-410	Fully Assembled Evaluation Board and 5 Loose Sample Pieces

Optimum Technology Matching® Applied

☐ GaAs HBT	☐ SiGe BiCMOS	☑ GaAs pHEMT	☐ GaN HEMT
☐ GaAs MESFET	☐ Si BiCMOS	☐ Si CMOS	☐ BiFET HBT
☐ InGaP HBT	☐ SiGe HBT	☐ Si BJT	☐ LDMOS

RF MICRO DEVICES®, RFMD®, Optimum Technology Matching®, Enabling Wireless Connectivity™, PowerStar®, POLARIS™ TOTAL RADIO™ and UltimateBlue™ are trademarks of RFMD, LLC. BLUETOOTH is a trademark owned by Bluetooth SIG, Inc., U.S.A. and licensed for use by RFMD. All other trade names, trademarks and registered trademarks are the property of their respective owners. ©2006, RF Micro Devices, Inc.

7628 Thorndike Road, Greensboro, NC 27409-9421 · For sales or technical support, contact RFMD at (+1) 336-678-5570 or customerservice@rfmd.com.

RFMD
rfmd.com

Absolute Maximum Ratings

Parameter	Rating	Unit
DC Supply Voltage	5.5	V
Operating Temperature Range	-40 to +85	°C
Storage Temperature	-40 to +150	°C
ESD - Human Body Model	500	V
ESD - CDM	1000	V
LNA Input Power (No Damage)	5	dBm
Moisture Sensitivity	MSL2	

Caution! ESD sensitive device.

Exceeding any one or a combination of the Absolute Maximum Rating conditions may cause permanent damage to the device. Extended application of Absolute Maximum Rating conditions to the device may reduce device reliability. Specified typical performance or functional operation of the device under Absolute Maximum Rating conditions is not implied.

The information in this publication is believed to be accurate and reliable. However, no responsibility is assumed by RF Micro Devices, Inc. ("RFMD") for its use, nor for any infringement of patents, or other rights of third parties, resulting from its use. No license is granted by implication or otherwise under any patent or patent rights of RFMD. RFMD reserves the right to change component circuitry, recommended application circuitry and specifications at any time without prior notice.

RFMD Green: RoHS compliant per EU Directive 2002/95/EC, halogen free per IEC 61249-2-21, < 1000ppm each of antimony trioxide in polymeric materials and red phosphorus as a flame retardant, and <2% antimony in solder.

Parameter	Specification			Unit	Condition
	Min.	Typ.	Max.		
Compliance					IEEE802.11a, FCC CFR 15.247, .205, .209, EN and JDEC, V_{DD}=2.7 to 4.2V, LNA_EN=2.5 to V_{DD}-0.2V, Temp=-15°C to +75°C, Freq=4.9GHz to 5.85GHz, unless otherwise noted.
Receive Parameters					
Frequency	4.90		5.85	GHz	
LNA Voltage Supply (V_{DD})	2.7	3.6	4.2	V	
LNA Enable Voltage (LNA-EN)					
LNA Enabled	2.5	3.3	V_{DD} - 0.2	V	
LNA Off	0		0.2	V	LNA_EN off turns bypass switch ON
Switch Control Logic					
Low		0	0.2	V	
High	2.5	3.3	V_{DD} - 0.2	V	
LNA Current					
LNA V_{DD}		17	22	mA	LNA in “ON” State
			29	mA	Extended temp range, -40 to +85C, input drive level -5Bm
	0	5	30	uA	LNA in “OFF” State
			500	uA	Extended temp range -40C to +85C
LNA_EN Current			1	mA	LNA in “ON” State
			100	uA	LNA in “OFF” State
			600	uA	Extended temp range -40C to +85C
Gain					
WiFi RX	11	16	20	dB	Includes temp range -40C to +85C
Bypass Mode	-13	-9	-7	dB	Includes temp range -40C to +85C
Noise Figure		2.4	3.2	dB	V_{DD}≥3.0V, including switch
			3.4	dB	Extended temp range -40C to +85C
Passband Ripple					
WiFi RX Mode	-1.3		+1.3	dB	5.10GHz to 5.85GHz
	-0.8		+0.8	dB	4.9GHz to 5.1GHz
WiFi RX Bypass Mode	-0.8		+0.8	dB	
WiFi RX Port Return Loss		10		dB	
IP1dB		-7		dBm	
		-10		dBm	Extended temp range -40C to +85C
IIP3		3		dBm	
		0		dBm	Extended temp range -40C to +85C

7628 Thorndike Road, Greensboro, NC 27409-9421 · For sales or technical support, contact RFMD at **(+1) 336-678-5570** or **customerservice@rfmd.com**.

Parameter	Specification			Unit	Condition
	Min.	Typ.	Max.		
Transmit Switch Parameters					IEEE 802.11a, FCC CFR 15.247, .205, .209, EN and JDEC, Control voltage=2.5 to 4.8V, Temp=15°C to +75°C, Freq=4.9GHz to 5.85GHz, unless otherwise noted
Frequency	4.90		5.85	GHz	
Insertion Loss		1	1.8	dB	Includes temp range -40 to +85C
Passband Ripple	-0.2		+0.2	dB	Over all conditions
Input P1dB	25	30		dBm	Switch ports only, over all conditions
	23			dBm	Extended temp range -40C to +85C; CW signal
Input Power	18			dBm	System EVM=0.5% assumed for the incoming signal; 18dbm at the input with 1% composite EVM at the output.
Input Return Loss	9.6	12		dB	Over all conditions
Output Return Loss	8.5	12		dB	Over all conditions
Port Impedance Tuning		50		Ω	All RF ports tuned for 50Ω system
Isolation TX to RX	20			dB	TX DC mode, path ANT to RX, over all conditions
Isolation RX to TX	20			dB	WiFi RX Bypass Mode, path ANT-TX, over all conditions
Switch Control Current		35	50	uA	Per control line, over all conditions
			100	uA	Extended temp range -40C to +85C
Switch Control Speed		75	150	nsec	Over all conditions

Pin	Function	Description
1	GND	Ground.
2	ANT	This is the common port (antenna). Matched to 50Ω. External DC blocking capacitor required.
3	GND	Ground.
4	LNA_EN	LNA Enable/Bypass Enable control pin. See switch truth table for proper settings.
5	GND	Ground.
6	VDD	Supply voltage to the LNA.
7	NC	No Board Connection Allowed.
8	RX_OUT	Receive port for 802.11a/n band. RX output includes integrated DC-block and 50Ω match.
9	NC	No Board Connection Allowed.
10	GND	Ground.
11	TX_IN	Transmit port for 802.11a/n band. Matched to 50Ω. External DC blocking capacitor required.
12	C_TX/RX	Transmit and receive mode control pin. See switch truth table for proper settings.

Pin Out

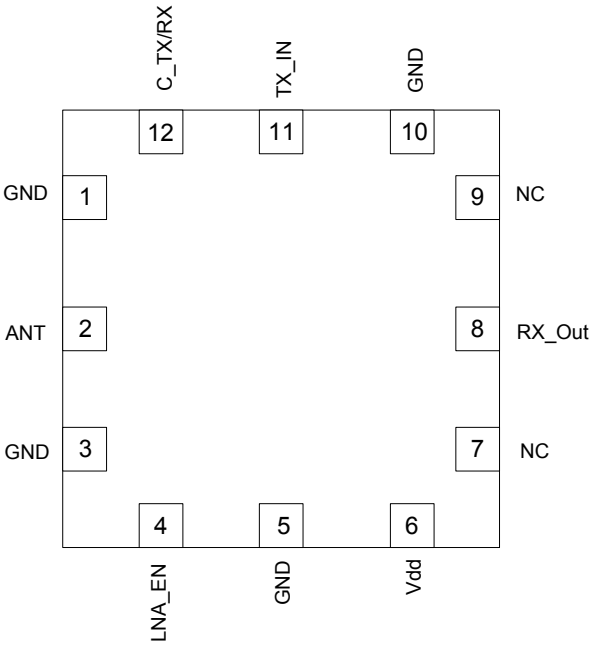

Switch Logic Truth Table:

Mode	C_TX/RX	LNA_EN
RX Gain	L	H
RX Bypass	L	L
TX	H	L

7628 Thorndike Road, Greensboro, NC 27409-9421 · For sales or technical support, contact RFMD at (+1) 336-678-5570 or customerservice@rfmd.com.

Package Drawing

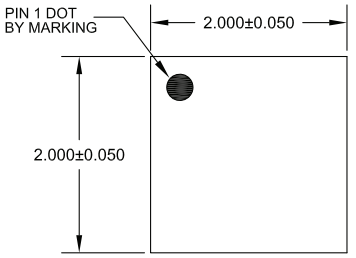

TOP VIEW

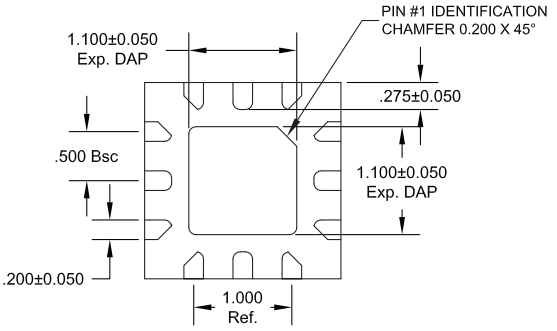

BOTTOM VIEW

		ETSLP
A	MAX.	0.500
	NOM.	0.450
	MIN.	0.400

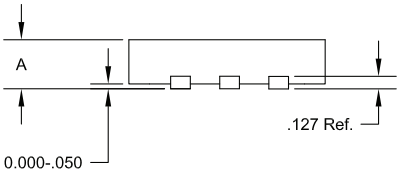

SIDE VIEW

Notes:
1) Pin 1 Shaded Area

rfmd.com

PCB Pattern

A = 0.250 x 0.402 (mm) Typ
B = 0.402 x 0.250 (mm) Typ
C = 0.250 x 0.402 (mm) 60% Rounded Rectangle
D = 0.402 x 0.250 (mm) 60% Rounded Rectangle
E = 1.050 x 1.050 (mm)

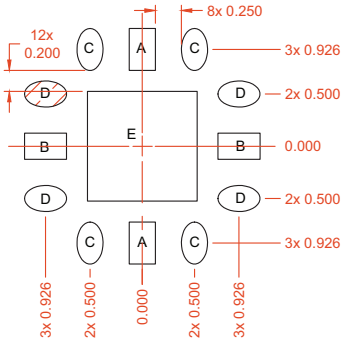

PCB METAL PATTERN

A = 0.350 x 0.502 (mm) Typ
B = 0.502 x 0.350 (mm) Typ
C = 0.350 x 0.502 (mm) 60% Rounded Rectangle
D = 0.502 x 0.350 (mm) 60% Rounded Rectangle
E = 1.150 x 1.150 (mm)

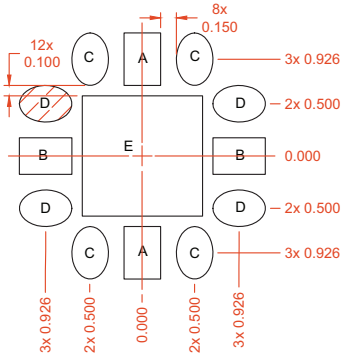

PCB SOLDER MASK PATTERN

A = 0.225 x 0.362 (mm)
B = 0.362 x 0.225 (mm)
C = 0.225 x 0.362 (mm) 60% Rounded Rectangle
D = 0.362 x 0.225 (mm) 60% Rounded Rectangle
E = 0.945 x 0.945 (mm)

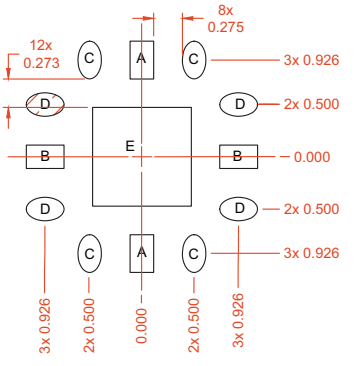

PCB STENCIL PATTERN

Shaded area represents Pin 1 location.

Application Schematic

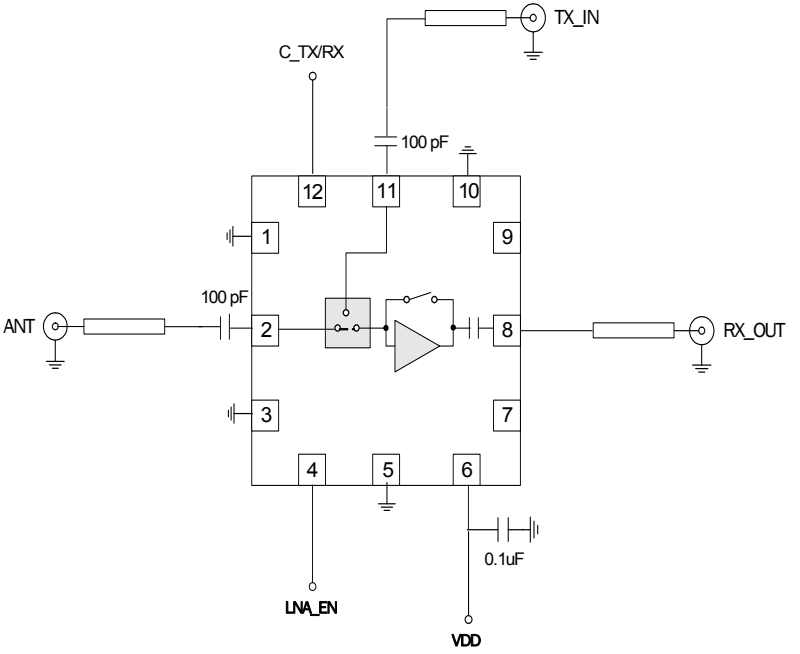

7628 Thorndike Road, Greensboro, NC 27409-9421 · For sales or technical support, contact RFMD at **(+1) 336-678-5570** or **customerservice@rfmd.com**.

RF5540 Performance Plots

