RF2681

W-CDMA LINEAR VARIABLE GAIN DRIVER AMPLIFIER

Typical Applications

- PA Driver Amplifier for W-CDMA Handsets
- General Purpose Driver Amplifier

Product Description

The RF2681 is a linear variable gain amplifier specifically designed for PA driver applications in W-CDMA handsets. The device maintains excellent linearity over a 30dB gain control range, while providing a maximum of 26dB gain. The IC is manufactured on an advanced Gallium Arsenide Heterojunction Bipolar Transistor Process and is provided in an extremely small 3mmx3mm, 12-pin, leadless chip carrier.

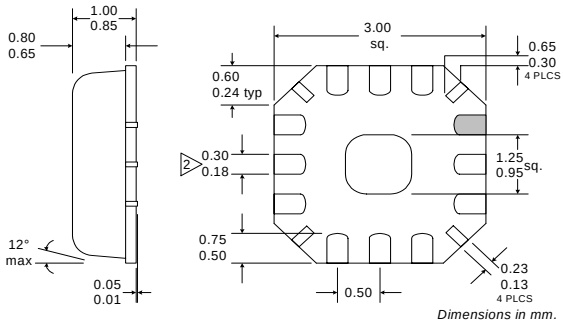

Dimensions in mm.

NOTES:

1. Shaded Pin is Lead 1.
2. Dimension applies to plated terminal and is measured between 0.02 mm and 0.25 mm from terminal end.
3. Pin 1 identifier must exist on top surface of package by identification mark or feature on the package body. Exact shape and size is optional.
4. Package Warpage: 0.05 mm max.
5. Die thickness allowable: 0.305 mm max.

Optimum Technology Matching® Applied

- ☐ Si BJT
- ☑ GaAs HBT
- ☐ GaAs MESFET
- ☐ Si Bi-CMOS
- ☐ SiGe HBT
- ☐ Si CMOS

Package Style: LCC, 12-Pin, 3x3

Features

- 30dB Linear Gain Control Range
- 26dB Maximum Gain
- Single 2.7V to 3.3V Supply
- High Linearity Over Entire Gain Control Range
- 9dBm Output Drive Available

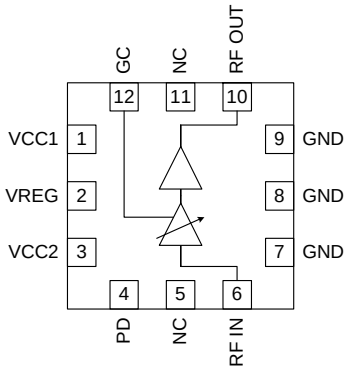

Functional Block Diagram

Ordering Information

RF2681	W-CDMA Linear Variable Gain Driver Amplifier
RF2681 PCBA	Fully Assembled Evaluation Board

RF Micro Devices, Inc.
7628 Thorndike Road
Greensboro, NC 27409, USA
Tel (336) 664 1233
Fax (336) 664 0454
http://www.rfmd.com

Absolute Maximum Ratings

Parameter	Rating	Unit
Supply Voltage	-0.5 to +3.6	V_{DC}
Operating Ambient Temperature	-40 to +85	°C
Storage Temperature	-40 to +150	°C



Caution! ESD sensitive device.

RF Micro Devices believes the furnished information is correct and accurate at the time of this printing. However, RF Micro Devices reserves the right to make changes to its products without notice. RF Micro Devices does not assume responsibility for the use of the described product(s).

Parameter	Specification			Unit	Condition
	Min.	Typ.	Max.		
Overall					
Usable Frequency Range		1800 to 2100		MHz	
Linear Gain Control Range		30		dB	
Gain Control Slope		40		dB/V	
W-CDMA					
Operating Frequency		1920 to 1980		MHz	
Small Signal Gain	24	26	29	dB	V_{GC}=2.4V (Maximum Gain)
	-7	-5	-3		V_{GC}=0V (Minimum Gain)
Output IP3	+22.0	+24.0	+26.0	dBm	V_{GC}=2.4V (Maximum Gain)
Noise Figure		3		dB	Small signal
Input VSWR		1.4:1	2:1		Over entire gain control range
Output VSWR		1.8:1	2:1		
Maximum Linear Output Power	8	9		dBm	W-CDMA ACPR<-43dBc
ACPR1 (5MHz Offset)			-48	dBc	Over entire gain control range. P_{IN} such that P_{OUT}=9dBm at maximum gain setting. W-CDMA reverse link modulation.
ACPR2 (10MHz Offset)			-62	dBc	
Power Supply					
Supply Voltage		2.7	3.3	V	Operating range
Gain Control Voltage		0 to 2.4		V	Useful range
Supply Current		38		mA	V_{CC}=2.7V
V_{GC} Current		220		µA	V_{GC}=2.4V (Maximum Gain)
		1.7		mA	V_{GC}=0.2V

Pin	Function	Description	Interface Schematic
1	VCC1	DC supply for internal bias circuitry. This pin should be tied to VCC, and must be bypassed with an RF capacitor. The trace length between the pin and the bypass capacitor should be minimized. The ground side of the capacitor should connect immediately to the ground plane.	
2	VREG	DC supply for internal bias circuitry. This pin should be tied to a 2.7V supply for proper operation. Increasing this voltage above 2.7V will result in increased current drain and is not recommended.	
3	VCC2	Same as pin 1.	
4	PD	Power down pin. This pin should be brought below 1V for proper operation. The device is turned off when the voltage on this pin increases above 2V.	
5	NC	This pin is not internally connected, but should be grounded, if possible, to improve RF isolation. Please refer to the evaluation board layout.	
6	RF IN	RF input pin. This pin requires external matching components, and is DC-coupled. Please refer to the applications schematic for recommended matching components.	
7	GND	Ground	
8	GND	Ground	
9	GND	Ground	
10	RF OUT	RF output pin. This pin requires an external matching network. VCC is provided through an inductor of that network. Please refer to the applications schematic for recommended matching components.	
11	NC	Same as pin 5.	
12	GC	Gain control pin. This pin allows the gain of the amplifier to be varied in a continuous “analog” fashion. With an applied voltage of 0.2V or less, the amplifier exhibits the minimum gain. In the region between 0.2V and 2.25V, the amplifier gain in dB depends on the voltage in a roughly linear manner. Above 2.25V, the amplifier gain is set for maximum.	
Pkg Gnd	GND	Ground connection for the device “die flag”. The backside of the package should be soldered to a top side ground pad which is connected to the PC board ground plane through multiple vias.	

Application Schematic
W-CDMA

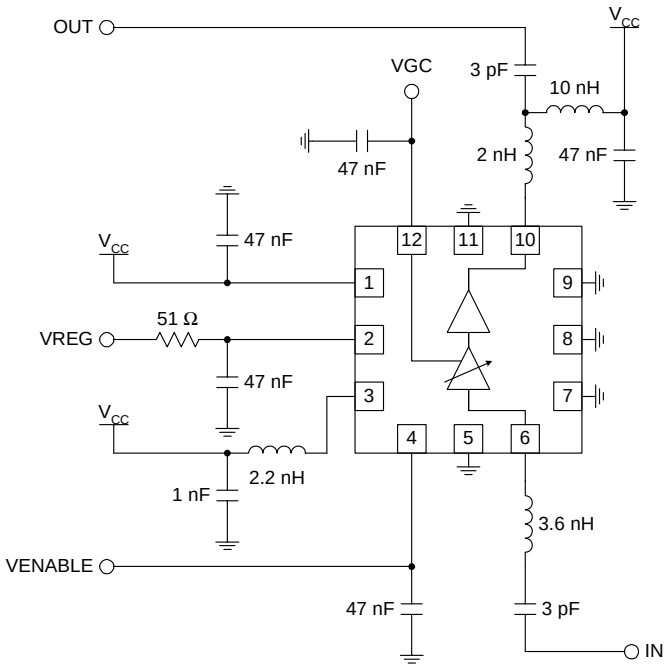

Evaluation Board Schematic

(Download Bill of Materials from www.rfmd.com.)

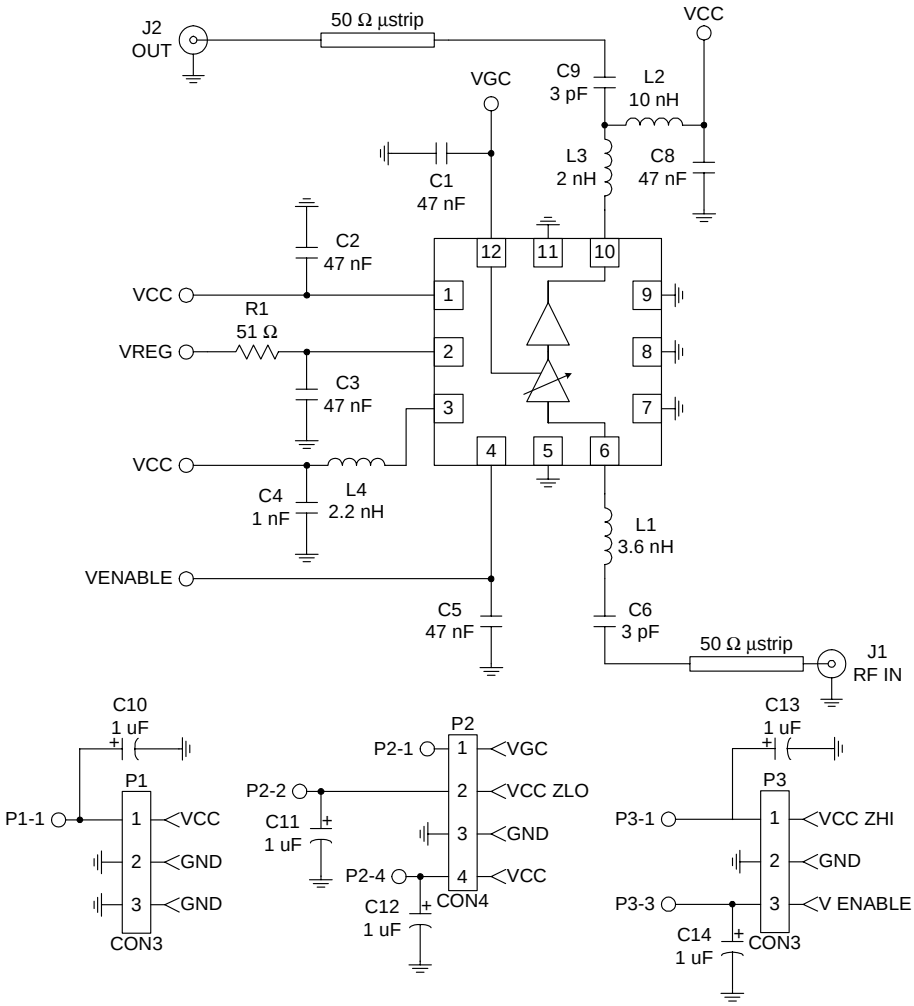

Evaluation Board Layout
Board Size 2.0” x 2.0”
Board Thickness 0.031”, Board Material FR-4

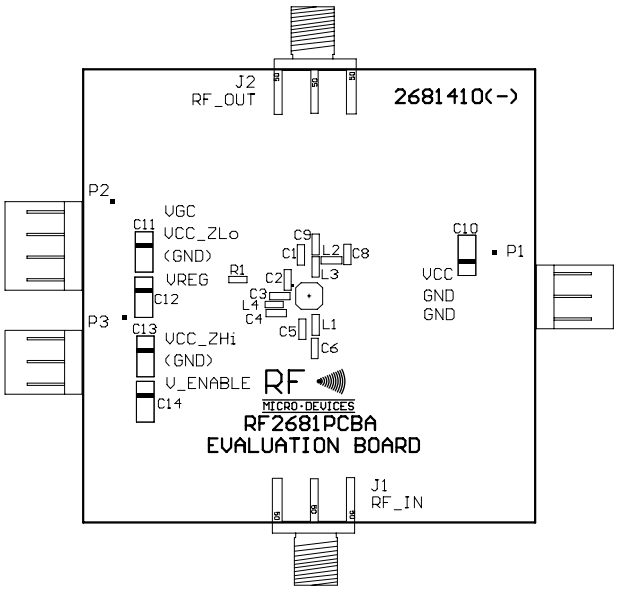

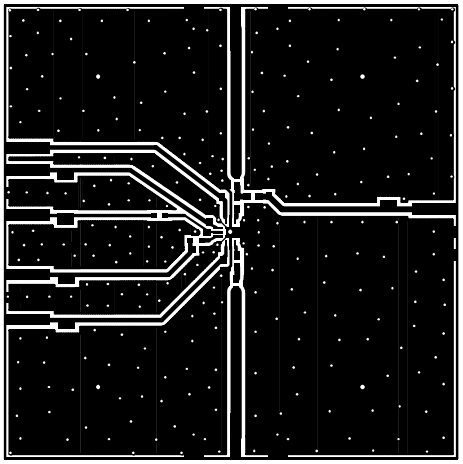

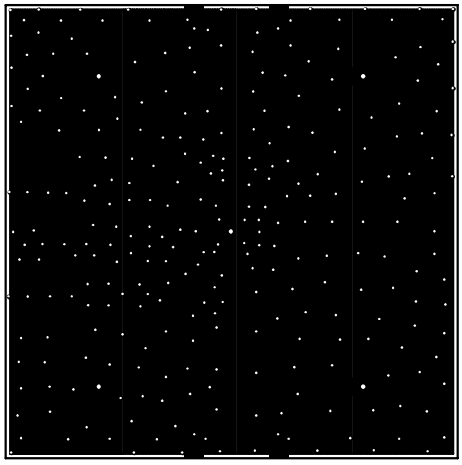

Input SWR versus V_{GC}

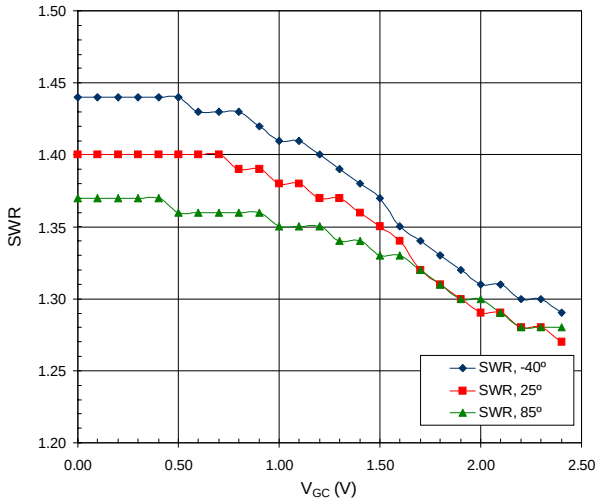

Output SWR versus V_{GC}

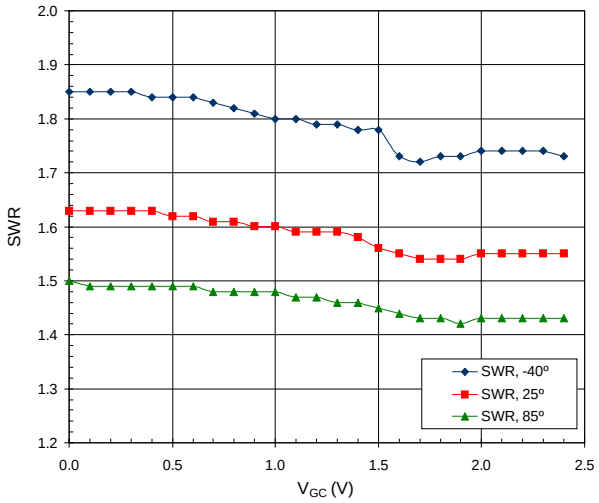

Gain versus V_{GC}

V_{CC} = 2.7 V, Freq = 1950 MHz

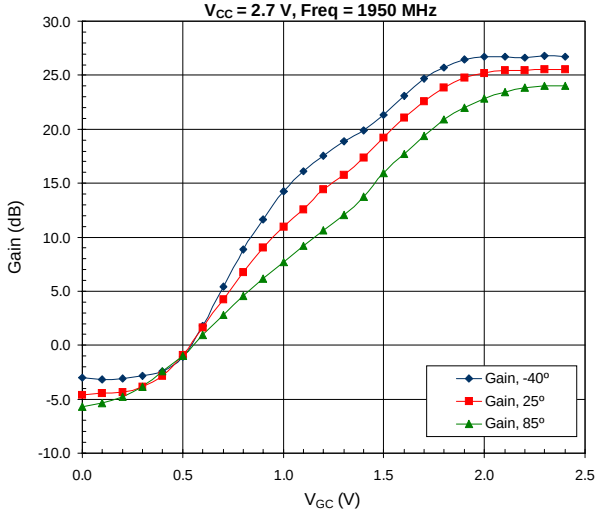

ACPR versus V_{GC}

Maximum Output Power: V_{CC} = 2.7 V, Freq = 1950 MHz

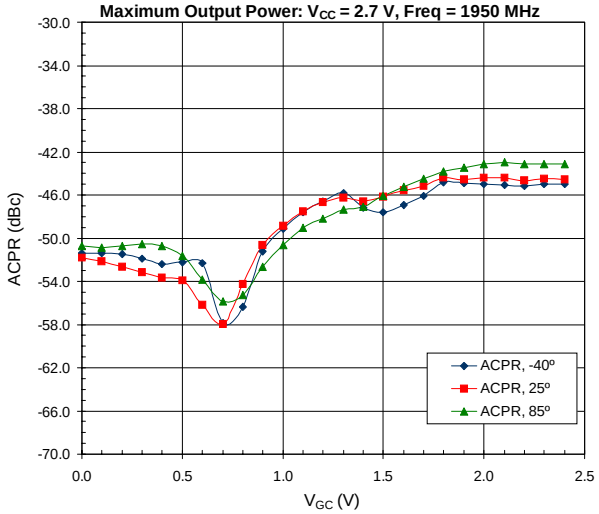

OIP3 versus V_{GC}

Maximum Output Power: V_{CC} = 2.7 V, Freq = 1950 MHz

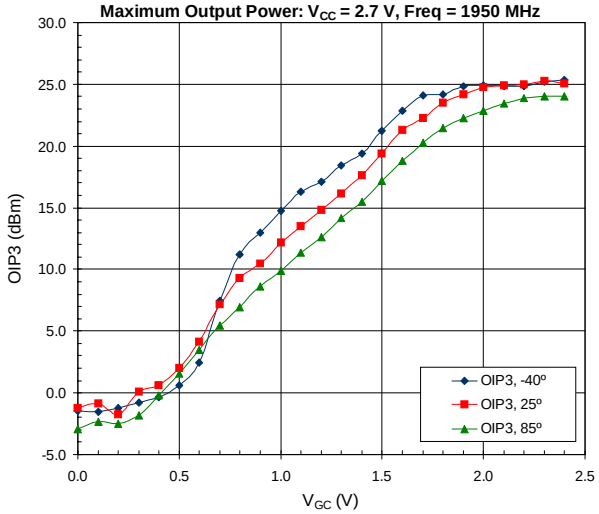

I_{CC} versus V_{GC}

V_{CC} = 2.7 V, Freq = 1950 MHz

