Rev	AWO #	Description	Date	Appr
-		RELEASED	02/16/05	

APPROVED: _____

DATE: _____ TITLE: _____

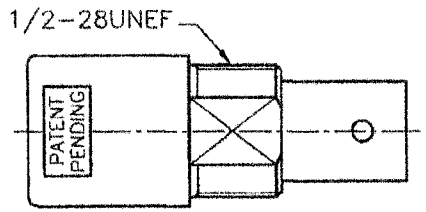

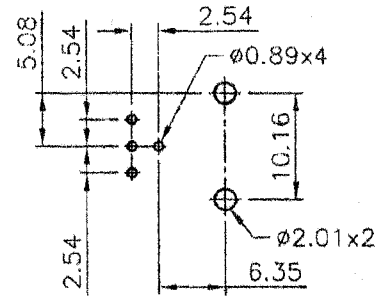

P.C.B. LAYOUT
(印刷電路板配置)

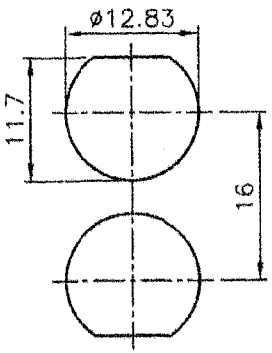

RECOMMENDED
MOUNTING HOLE
(建議架設孔)

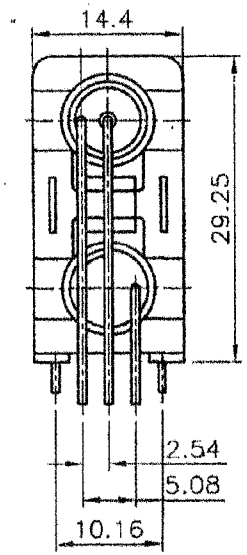

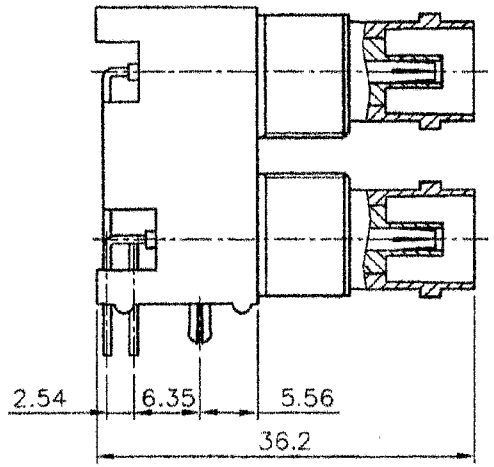

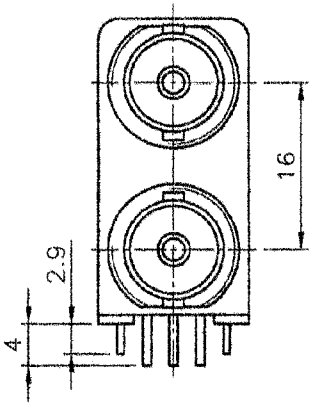

NO	DESCRIPTION	MATERIAL	FINISH	QTY
6	MOUNTING POST	BRASS	TIN	1
5	HOUSING	PBT		1
4	INSULATOR	POLYPROPYLENE		1
3	BODY	ZINC DICAST	NICKEL	1
2	GROUND	COPPER	TIN	1
1	CONTACT PIN	PHOSPHOR BRONZE	GOLD & TIN	1

UNLESS OTHERWISE SPECIFIED
ALL DIMENSIONS ARE MM [INCHES]
TOLERANCES: EXCEPT AS NOTED

INCHES		HOLES	
.X	± .10	Ø.X	±.10
.XX	± .020	Ø.XX	±.015
.XXX	± .015	Ø.XXX	±.010

APPROVALS		DATE
DRAWN	SLS	02/16/05
CHECKED		
APPROVED		

ADAM TECH
909 Rahway Avenue, Union, NJ 07083
Phone: 908-687-5000 Fax: 908-687-0214

TITLE: RF CONNECTOR, TYPE BNC, R/A
75 OHM, DUAL

SIZE: X | PART NO.: RF1-27-P-00-75-BLK | REV.: -

REF: | SCALE: NTS | SHEET 1 OF 1