Rev	AWO #	Description	Date	Appr
-		RELEASED	02/16/05	
A		ADDED RoHS TO SPECIFICATIONS	03/14/05	

APPROVED: _____

DATE: _____ TITLE: _____

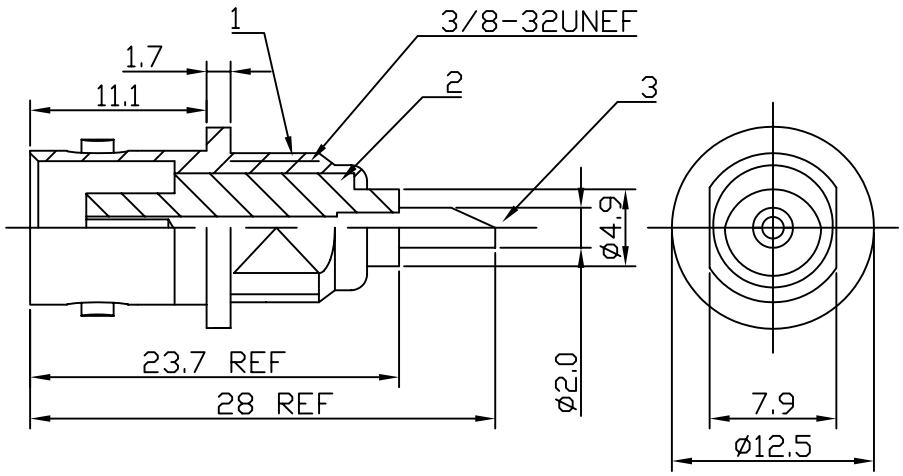

4

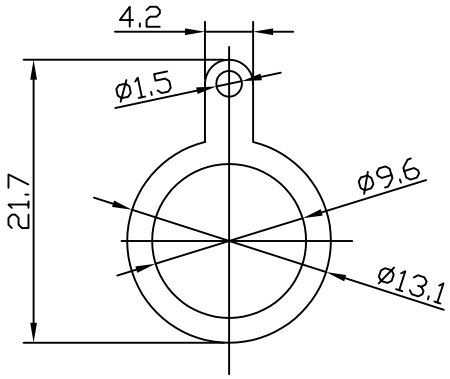

5

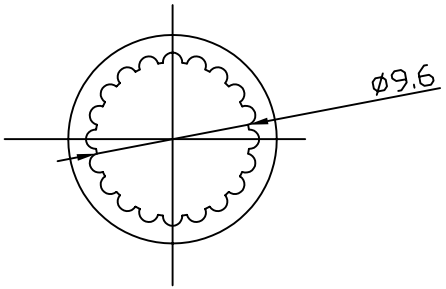

6

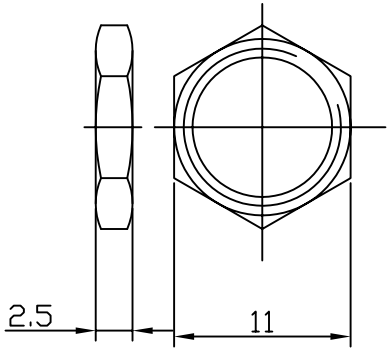

NO	DESCRIPTION	MATERIAL	FINISH	QTY
6	NUT	BRASS	NICKEL	1
5	WASHER	BRASS	NICKEL	1
4	GROUND LUG	BRASS	NICKEL	1
3	CENTER CONTACT	PHOSPHOR	GOLD	1
2	INSULATOR	TEFLON	WHITE	1
1	BODY	ZINC	NICKEL	1

SPECIFICATIONS:
Environmental:
Lead free, RoHS compliant.
Recomended soldering temp: 230° for 5 sec.

RoHS COMPLIANT

UNLESS OTHERWISE SPECIFIED
ALL DIMENSIONS ARE MM [INCHES]
TOLERANCES: EXCEPT AS NOTED

INCHES		HOLES	
.X	± .10	Ø.X	±.10
.XX	± .020	Ø.XX	±.015
.XXX	± .015	Ø.XXX	±.010

APPROVALS		DATE
DRAWN	SLS	02/16/05
CHECKED		
APPROVED		

ADAM TECH
909 Rahway Avenue, Union, NJ 07083
Phone: 908-687-5000 Fax: 908-687-0214

TITLE
RF CONNECTOR, TYPE BNC,
TEFLIN, 50 OHM, BULKHEAD

SIZE	PART NO.	REV.
X	RF1-23-T-XX-50	A

REF: | SCALE: NTS | SHEET 1 OF 1