SPECIFICATION
产品规格书

REFOND P/N 产品型号

RF-W1SA35IS-A47

□R&D 研发

■Mass Product 量产供货

深圳市瑞丰光电子股份有限公司 承认专用章

Contents 目录

1. Description 产品介绍 4
1.1 General Description 产品描述 4
1.2 Features 产品特征 4
1.3 Application 产品应用 4
1.4 Package Dimension 封装尺寸 5
1.5 Product Parameters 产品参数 6
1.6 Typical optical characteristics curves 典型光学特性曲线 7
2. Packaging 产品包装 11
2.1 Packaging Specification 包装规格 11
2.1.1 Carrier Tape Dimension 载带尺寸 11
2.1.2 Reel Dimension 卷盘尺寸 11
2.1.3 Label Form Specification 标签规格 12
2.2 Moisture Resistant Packing 防潮包装 12
2.3 Cardboard Box 包装纸箱 13
2.4 Reliability Test Items And Conditions 信赖性测试项目及条件 13
2.5 Criteria For Judging Damage 失效判定标准 14
3. SMT Reflow Soldering Instructions SMT 回流焊说明 15
3.1 SMT Reflow Soldering Instructions SMT 回流焊说明 15
3.1.1 Soldering Iron 烙铁焊接 17
3.1.2 Repairing 修补 17
3.1.3 Cleaning 清洗 17
4.Handling Precautions 产品使用注意事项 18
4.1Handling Precautions 产品使用注意事项 18
4.1.1 Storage 贮存 18
4.1.2 Static Electricity 静电 18
4.1.3 Reverse voltage protection 反压保护 19
4.1.4 The safe temperature for LEDs working 温度保护 19

江西瑞丰光电子股份有限公司
承 认 专 用 章

4.1.5 Others 其它事项 20
4.1.6 Declare 申明.....20

深圳市瑞丰光电子股份有限公司
承 认 专 用 章

1. Description 产品介绍

1.1 General Description 产品描述

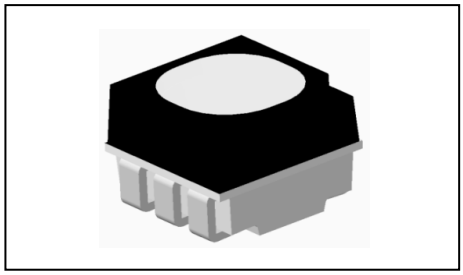

The product is a full-color LED device, High contrast(Surface brush design). The product size: 3.7mmX3.5mmX2.8mm.

该产品为全彩 LED 器件，高对比度(表面刷墨设计)，产品尺寸: 3.7mmX3.5mmX2.8mm。

1.2 Features 产品特征

► Surface not reflective. 表面不反光

► High luminous Intensity, Low power dissipation, Good reliability and Long life.
光强高、功耗低、可靠性好、寿命长

► Water-resistant(IPX6): 防水等级(IPX6)

► Moisture sensitivity level: 5a 潮湿敏感等级:5a

► RoHS compliant. 满足RoHS要求

►Matte surface. 哑光表面

►Pb-free reflow soldering application. 无铅回流焊

1.3 Application 产品应用

► Oudoor full-color video screen. 户外全彩显示屏

► The automobile dashboard. 汽车仪表盘

► Indoor and outdoor decorative lighting. 室内外装饰照明

► Amusement. 娱乐产品

►General use. 其他应用

深圳市瑞丰光电子股份有限公司 承认专用章

1.4 Package Dimension 封装尺寸

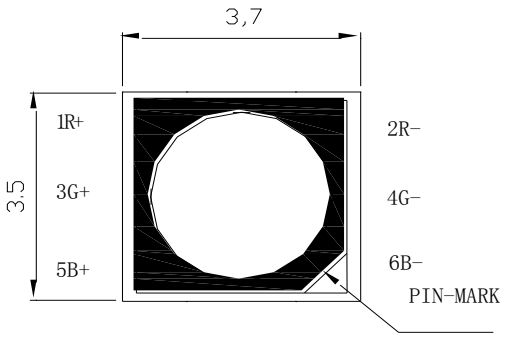

Fig.1-1 Top view 正面视图

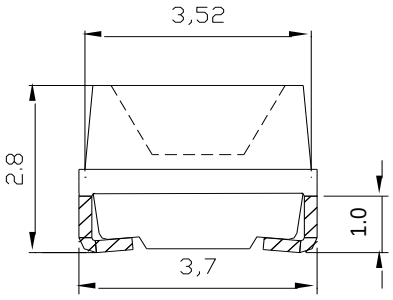

Fig.1-2 Side view 侧面视图

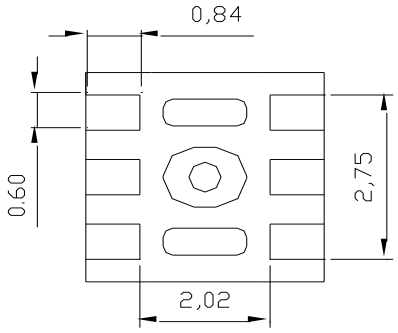

Fig.1-3 Bottom view 背面视图

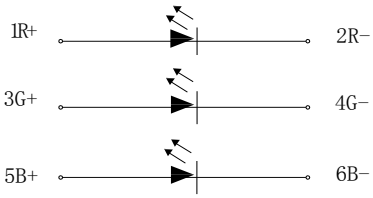

Fig.1-4 Polarity 极性

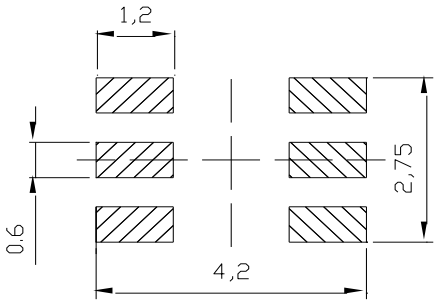

Fig.1-5 Soldering patterns 推荐焊盘

Notes 备注:

1. All dimensions units are millimeters. 所有尺寸标注单位为毫米

2. All dimensions tolerances are ±0.1mm unless otherwise noted.除特别标注外，所有尺寸公差为±0.1 毫米

深圳市瑞丰光电子股份有限公司 承认专用章

1.5 Product Parameters 产品参数

Table 1-1 Electrical / Optical Characteristics at Ts=25°C 电性与光学特性

Item 项目	Symbol 符号	Test Condition 测试条件	Value			Unit 单位
			R	G	B	
Reverse Current (漏电流)	I_R	V_R=5V	6	6	6	μA
Forward Voltage (正向电压)	$V_{F(min)}$	R I_F = 20mA G I_F = 20mA B I_F = 20mA	1.7	2.7	2.7	V
	$V_{F(max)}$		2.4	3.4	3.4	V
Dominant Wavelength 主波长	λ_D		618~ 628	518~530	464~474	nm
Spectrum Radiation Bandwidth 半波宽	Δ λ		24	38	30	nm
Luminous Intensity 光强	$I_{V(min)}$		500	1200	290	mcd
	$I_{V(avg)}$		650	1500	380	mcd
Viewing Angle (发光角度)	2θ1/2		110			deg

Table 1-2 Absolute Maximum Ratings at Ts=25°C 绝对最大值

Parameter（参数）	Symbol（符号）	Rating（值）			Unit 单位
		R	G	B	
Forward Current (正向电流)	I_F	25	20	20	mA
Peak Forward Current (峰值电流)	I_{FP}	80	80	80	mA
Reverse Voltage (反向电压)	V_R	5	5	5	V
Operating Temperature (操作温度)	T_{OPR}	-30 ~ +85			℃
Storage Temperature (储存温度)	T_{STQ}	-40 ~ +100			℃
Power Dissipation (功耗)	P_D	60	68	68	mW
Electrostatic Discharge (HBM)（静电）	E_{SD}	1000V			

深圳市瑞丰光电子股份有限公司 承认专用章

Notes 备注:

1. 1/10 Duty cycle, 0.1ms pulse width. 脉宽0.1ms,占空比1/10.

2. The above forward voltage measurement allowance tolerance is ±0.05V. 以上所示电压测量误差 ±0.05V。

3. The above Tolerance of measurement of dominant wavelength ±1nm. 以上所示波长测量公差 ±1nm。

4. The above luminous intensity measurement allowance tolerance ±10%. 上述发光强度的测试允许公差为±10%。

5. Care is to be taken that power dissipation does not exceed the absolute maximum rating of the product. 使用功率不能超过规定的最大值。

6. All measurements were made under the standardized environment of Refond. 所有测试都是基于瑞丰现有的标准测试平台。

7. All the datas are just for reference, specific parameters please refer to the label. 以上参数仅供参考,请以实物标签为准。

1.6 Typical optical characteristics curves 典型光学特性曲线

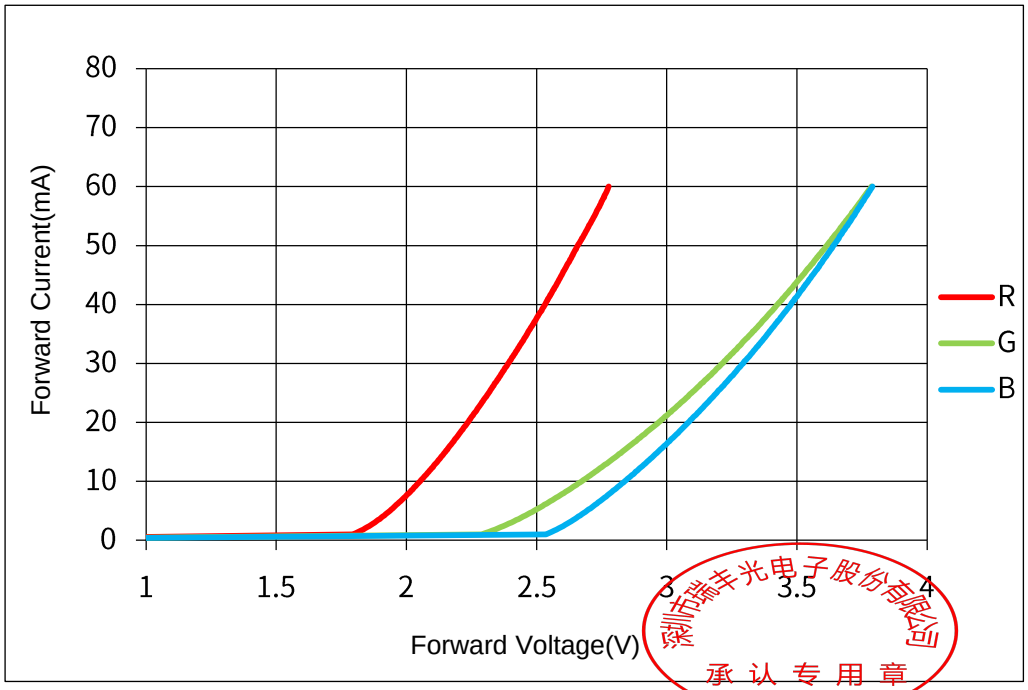

Fig 1-6 Forward Voltage Vs. Forward Current 伏安特性曲线

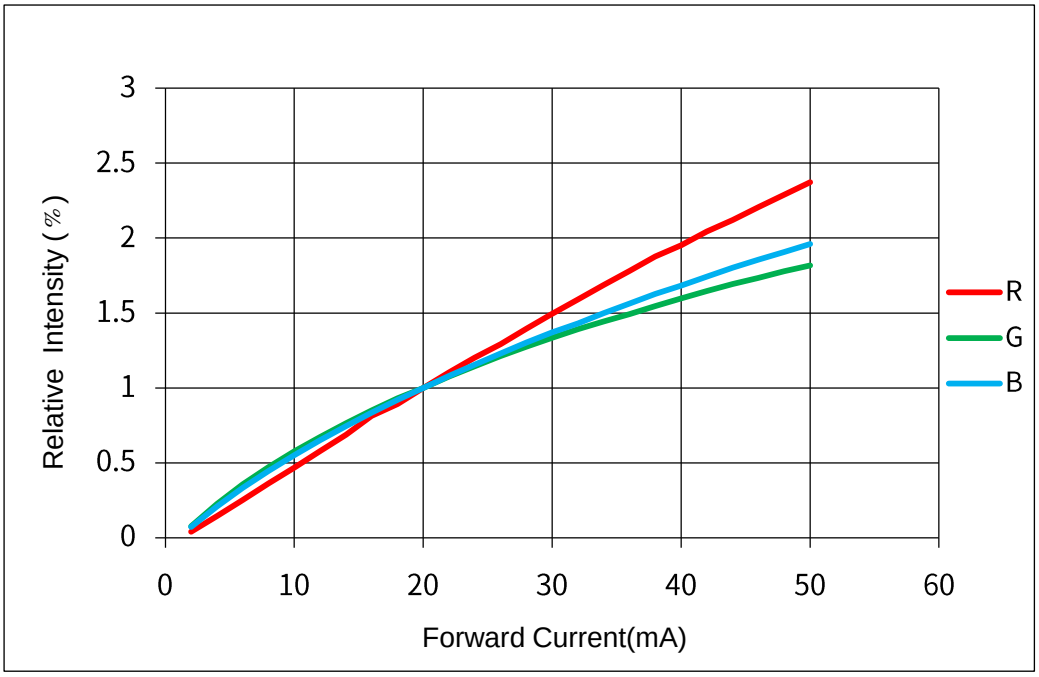

Fig 1-7 Forward Current Vs. Relative Intensity 正向电流与相对光强特性曲线

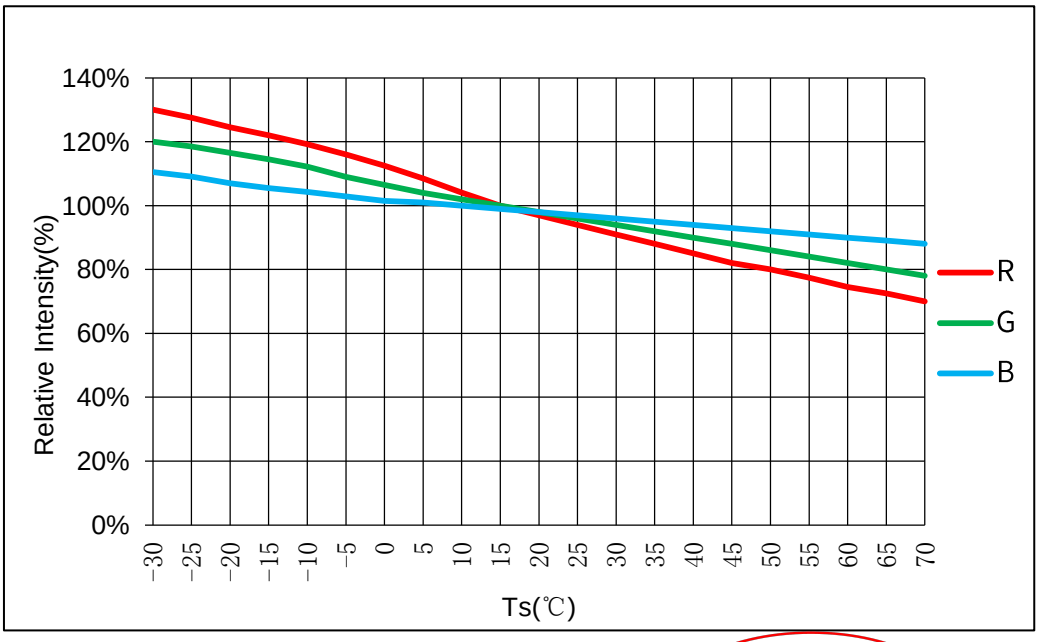

Fig 1-8 Luminous Intensity VS Ambient Temperature 光强与环境温度曲线

瑞豐光电子股份有限公司
承 认 专 用 章

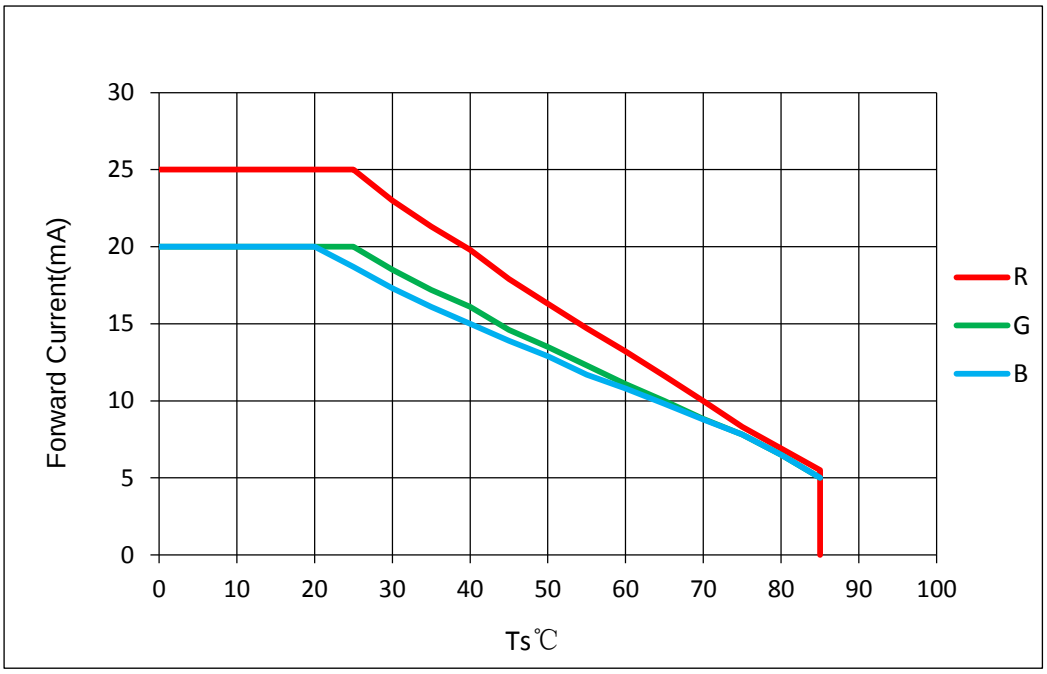

Fig 1-9 Solder Temperature Vs Forward Current 管脚温度与正向电流特性曲线

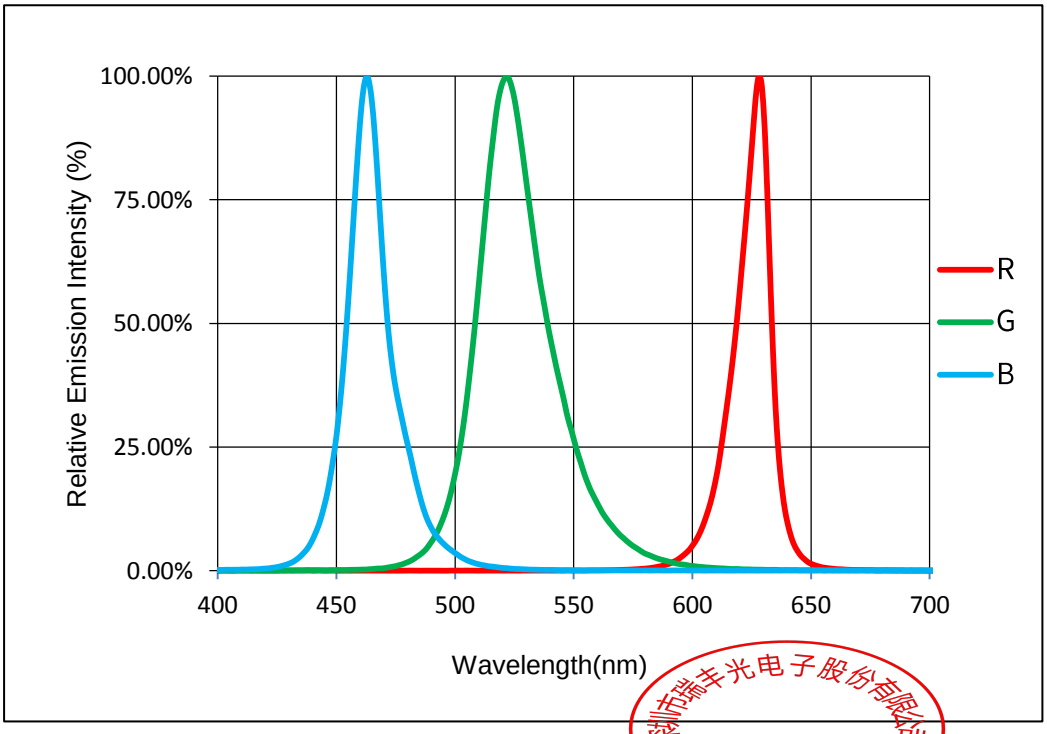

Fig 1-10 Spectrum Distribution光谱分布特性曲线

深圳市瑞丰光电子股份有限公司
承认专用章

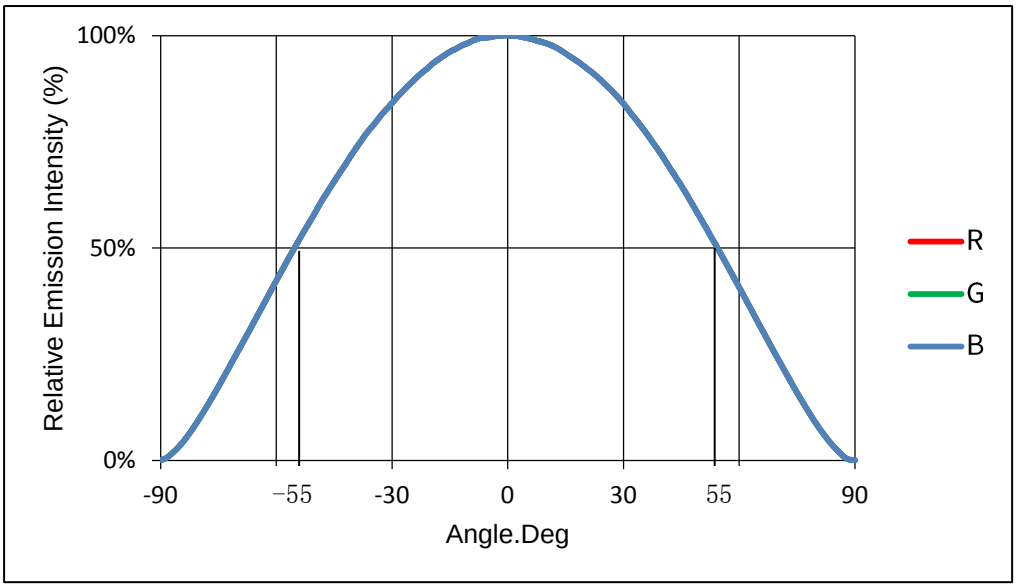

Fig 1-11 Directivity X-X radiation angle X轴方向辐射角度

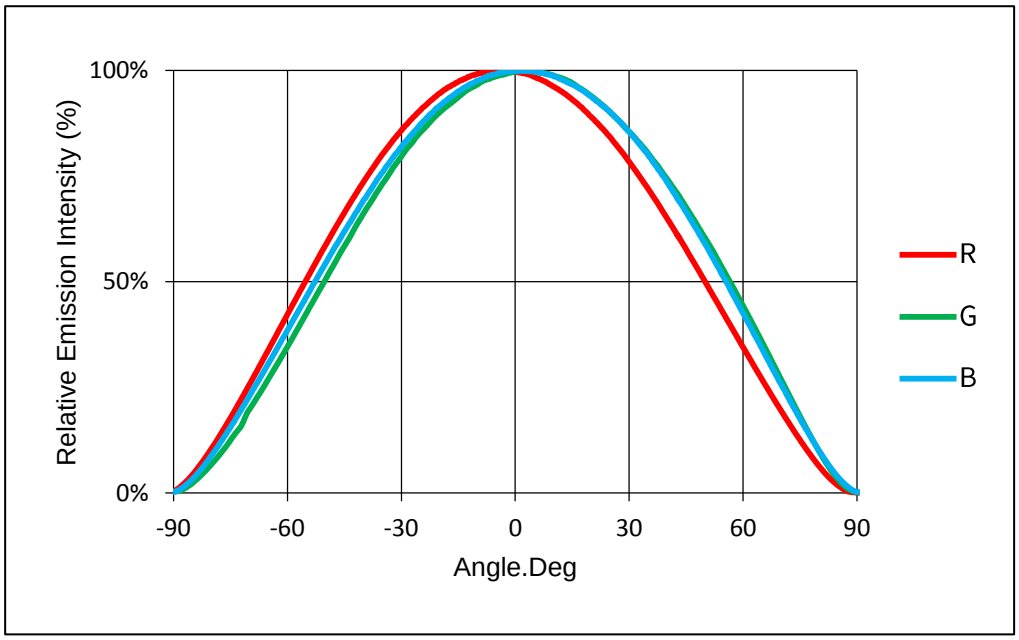

Fig 1-12 Directivity Y-Y radiation angle Y轴方向辐射角度

深圳市瑞丰光电子股份有限公司 承认专用章

2. Packaging 产品包装

2.1 Packaging Specification 包装规格

Package:3000pcs/reel.包装每卷 3000pcs。

2.1.1 Carrier Tape Dimension 载带尺寸

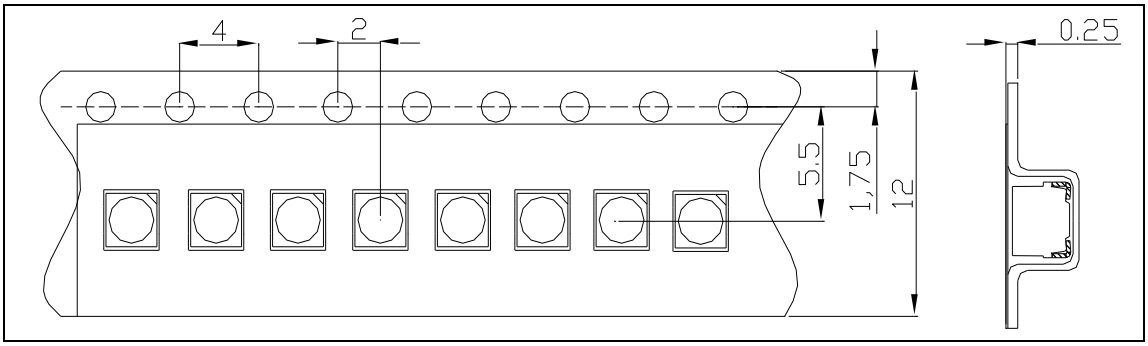

Fig.2-1 Carrier Tape Dimension 载带尺寸

2.1.2 Reel Dimension 卷盘尺寸

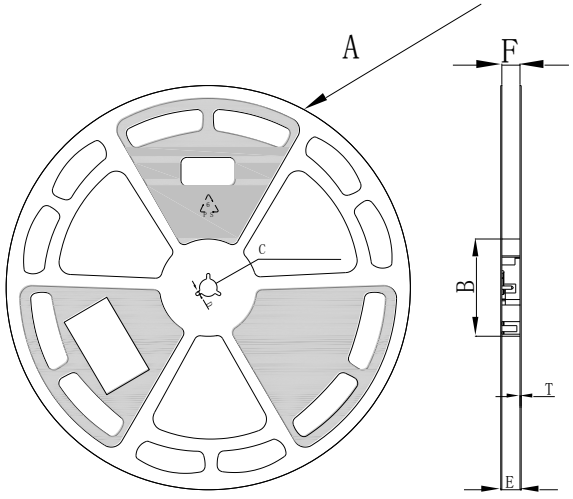

Fig.2-2 Title 图名

Table 2-1 Title 表名

A	320.2±2mm
B	79.5±0.2mm
C	14.3±0.2mm
D	2.5±0.2mm
E	15.5±0.2mm
F	12.7±0.3mm
T	2.0±0.2mm

深圳市瑞丰光电子股份有限公司 承认专用章

Notes 备注:

The tolerances unless mentioned ±0.1mm. Unit : mm 注：未注公差为±0.1毫米，尺寸单位：毫米。

2.1.3 Label Form Specification 标签规格

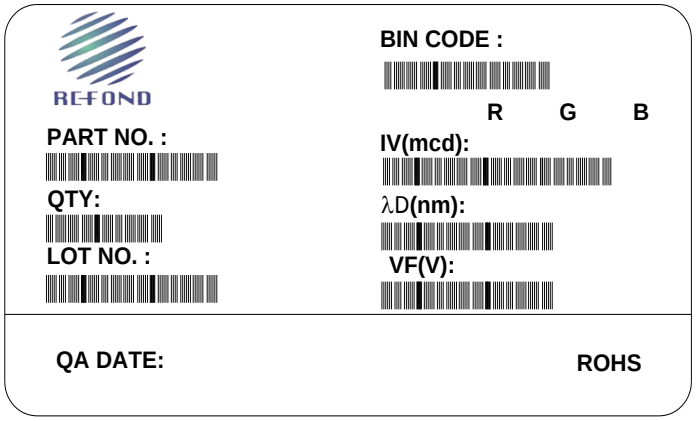

Fig 2-3 Title 图名

Table 2-2 Title 表名

PART NO.	Part Number 品名
LOT NO.	Lot Number 批次号
BIN CODE	Bin Code 参数代码
IV	Llight intensity 光强
VF	Forward Voltage 正向电压
λD	Wavelength 波长代码
QTY	Packing Quantity 数量
DATE	Made Date 生产日期

2.2 Moisture Resistant Packing 防潮包装

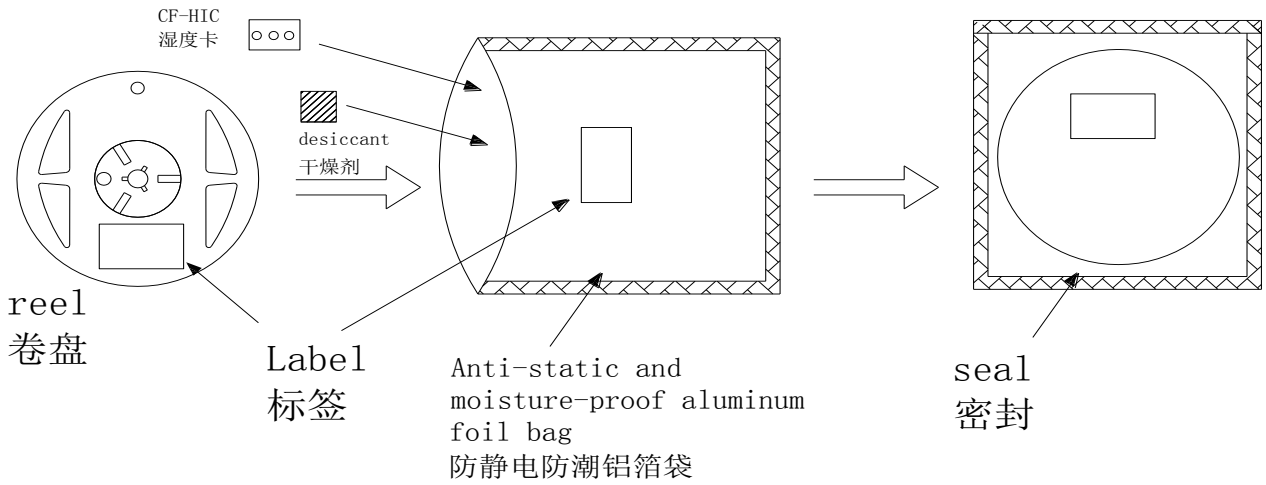

Fig.2-4 Title 图名

深圳市瑞丰光电子股份有限公司 承认专用章

2.3 Cardboard Box 包装纸箱

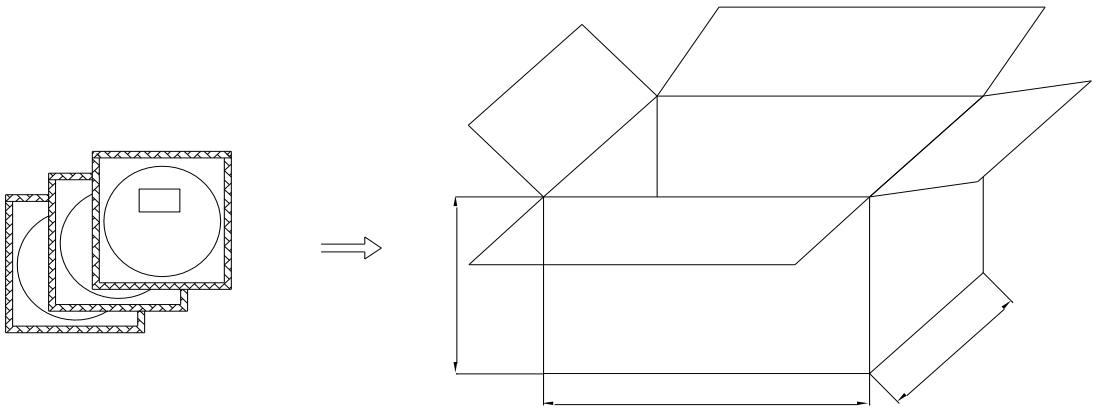

Fig.2-5 Title 图名

2.4 Reliability Test Items And Conditions 信赖性测试项目及条件

Table 2-3 Title 表名

Test Items 项目	Ref.Standard 参考标准	Test Condition 测试条件	Time 时间	Quantity 数量	Ac/Re 接收/拒收
Resistance to Soldering Heat 耐焊接热	JESD22-B106	Temp:260℃max T=10 sec	3times	22pcs.	0/1
Thermal Shock 冷热冲击	JEITAED-4701 300 307	-40℃ 15min ↑↓10s 100℃ 15min	500cycle	22pcs.	0/1
High Temperature Storage 高温保存	JEITAED-4701 200 201	Temp:100℃	1000hrs.	22pcs.	0/1
Low Temperature Storage 低温保存	JEITA ED-4701 200 202	Temp:-40℃	1000hrs.	22pcs.	0/1

深圳瑞丰光电子股份有限公司 承认专用章

Room Temperature Operating Life 常温寿命测试	JESD22-A108	T_A=25℃ I_F=20mA	1000hrs.	22pcs.	0/1
High Temperature High Humidity Life Test 高温高湿寿命测试	JESD22-A101	85℃/ 85%R_H I_F=15mA	500hrs.	22pcs.	0/1
Temperature Humidity Storage 高温高湿储存	JEITA ED-4701 100 103	T_A=85℃ R_H=85%	1000hrs.	22pcs.	0/1
Low Temperature Life Test 低温寿命	JESD22-A108D	T_A=-40°C, I_F=20mA	1000hrs.	22pcs.	0/1

2.5 Criteria For Judging Damage 失效判定标准

Table 2-4 Title 表名

Test Items 项目	Symbol 符号	Test Condition 测试条件	Criteria For Judgement 判定标准
Forward Voltage 正向电压	V_F	I_F=20mA	Initial Data±10% 初始值±10%
Reverse Current 反向电流	I_R	V_R = 5V	I_R≤10μA
Luminous Intensity 光强	I_V	I_F=20mA	Average Iv degradation rate≤30% 平均 I_V衰减≤30%
Resistance to Soldering Heat 耐焊接热	/	/	No internal cracks, no material between stripped, no deaded light 材料无内部裂痕、剥离、无死灯

深圳市瑞豐光电子股份有限公司 承认专用章

Notes 备注：

1. The Reliability tests are based on Refond existing test platform. 可靠性测试基于瑞丰现有的测试标准。

2.The above reliability tests is based on the verification of a single/strip LED of Refond's existing experimentalplatform,the reliability experiment was taken under good heat dissipation conditions. when customers applies the LED to the series and parallel circuit,should take consideration of all the factors such as the current, voltage distribution, heat dissipation and others. 以上可靠性测试是基于瑞丰现有实验平台单颗/条 LED 在良好散热条件验证下的结果。客户端将 LED 应用于串、并联线路时，需自行评估电流、电压分配、散热等问题。

3.The technical information shown in the data sheets are limited to the typical characteristics and circuit examples of the referenced products. It does not constitute the warranting of industrial property nor the granting of any license. 以上技术数据仅为产品的典型值，只作为参考（以最终双方承认的规格为准），不作为任何应用条件及应用方式的保证。

3. SMT Reflow Soldering Instructions SMT 回流焊说明

3.1 SMT Reflow Soldering Instructions SMT 回流焊说明

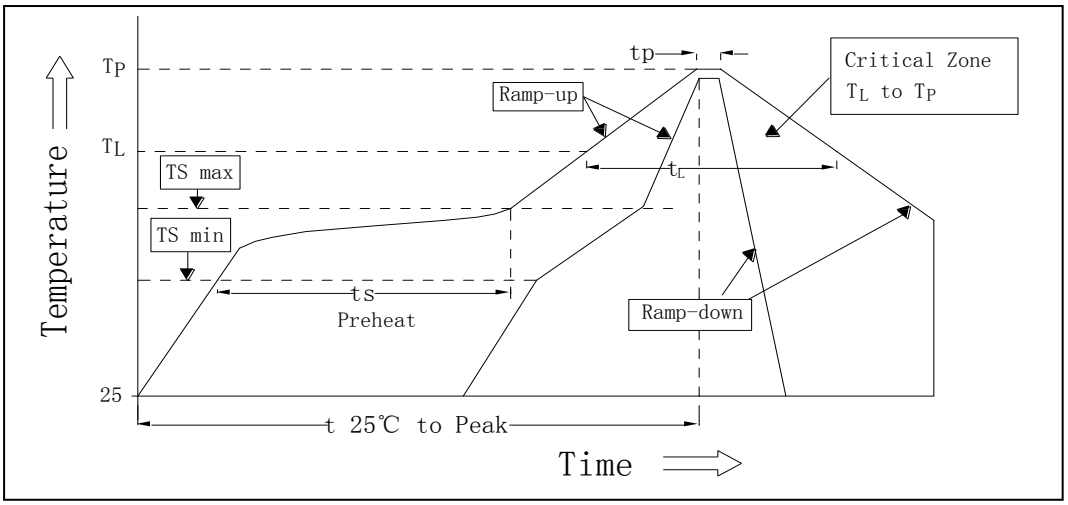

Fig.3-1 Title 图名

深圳市瑞丰光电子股份有限公司
承 认 专 用 章

Table 3-1 Title 表名

Average temperature rise speed平均升温速度（Tsmax至T_P）	Max 4 °C/ s 最高4 °C/秒
Preheating: minimum temperature预热：最低温度 (Tsmin)	150 °C
Preheating: Max temperature预热：最高温度 (Tsmax)	200 °C
Preheating: Time预热：时间（Tsmin 至Tsmax）	60s-120s 60 - 120秒
Time limited to maintain high temperature: the temperature 限时维持高温：温度 (T_L)	217 °C
Time limited to maintain high temperature: The Time 限时维持高温：时间 (t_L)	Max 60s 最多60秒
Peak /Classification of temperature: 峰值 / 分类温度 (T_P)	250 °C
Time limit classification of peak temperature time 限时峰值分类温度：时间（t_p）	Max 10s 最多10秒
Hold time within 5 °C with the actual peak temperature (TP) 与实际峰值温度 (T_P) 相差 5 °C 以内的保持时间	Max 30s 最多30秒
Cooling speed 降温速度	Max 6 °C/ s 最高6 °C/秒
Needed time from 25 °C to Tp 25 °C 升至峰值温度所需时间	Max 8 minutes 最多8分钟

Notes 备注：

1.Reflow soldering should not be done more than one times.回流焊接最多只能进行一次.

2.It is recommended that use the middle temperature solder paste.推荐使用中温锡膏生产加工

3.Stress on the LEDS should be avoided during heating in soldering process.在回流焊接过程中,不要对 LED 施加任何压力.

4.After soldering ,do not deal with the product before its temperature drop down to room temperature.在焊接完成后,待产品温度下降到室温后,再进行其它处理.

深圳市瑞丰光电子股份有限公司 承认专用章

3.1.1 Soldering Iron 烙铁焊接

(1) When hand soldering, keep the temperature of iron below less 300℃ less than 3 seconds
当手工焊接时，烙铁的温度必须小于300℃，时间不可超过3秒。

(2) The hand solder should be done only one time.手工焊接只可焊接一次。

3.1.2 Repairing 修补

Repair should not be done after the LEDs have been soldered. When repairing is unavoidable,a double-head soldering iron should be used (as below figure). It should be confirmed in advance whether the characteristics of LEDs will or will not be damaged by repairing.
LED回流焊后不应该修复，当必须修复时，必须使用双头烙铁，而且事先应确认此种方式会不会损坏LED本身的特性。

3.1.3 Cleaning 清洗

Try to use "no clean solder paste type", so, after reflow need not cleaning。If you need to clean the PCB, after the completion of welding recommended the use of isopropyl alcohol (IPA) cleaning。When using other solvents, it should be confirmed beforehand the solvents do not damage the LED.Do not use ultrasonic cleaning.
尽量使用“免清洗型”焊锡膏，这样，在回流焊后就不需要清洗焊剂。如果需要清洁PCB,焊接完成后推荐使用异丙醇(IPA)进行清洗. 使用其它类似溶剂清洗前,请先确认使用的溶剂不会对LED造成损伤.不推荐使用超声波清洗.

深圳市瑞丰光电子股份有限公司 承认专用章

4.Handling Precautions 产品使用注意事项

4.1Handling Precautions 产品使用注意事项

4.1.1 Storage 贮存

(1) Moisture proof and anti-electrostatic package with moisture absorbent material is used, Packaged products have one year to save time.

本产使用密封防潮抗静电袋包装,并附有干燥剂,未开封的产品保存时间一年.

(2) Before opening the package, the product should be kept at30℃ or less and humidity less the60%RH.

开封前,产品须存放在温度不高于30℃,湿度不高于60%RH的环境中.

(3) Seal anti-electrostatic bag humidity card should immediately check bag humidity indicator card in the open the bag after, Humidity is greater than or equal to 30%, Must be baked before use

密封防静电袋内的湿度卡应在打开袋子后立即查看袋内的湿度指示卡来确定,湿度显示大于或等于30%时,使用前须进行烘烤.

(4) After opening the package, the product should be soldered within 24 hours. If not, please store at 30℃or less and humidity less than 10%RH. It is recommended that the product be operated at the workshop condition of 30℃ or less and humidity less than 60%RH.

开封后,产品必须24小时内使用完(建议工作环境温度不高于30℃,湿度不高于60%),如未使用完,余料须存放在温度不高于30℃,湿度不高于10%的环境中.

(5) If the moisture absorbent material has fade away or the LEDs have exceeded the storage time, baking treatment should be performed based on the following condition : 65±5℃ for 24 hours.

对于尚未焊接的LED,如果吸湿剂或包装失效,或者产品没有符合以上有效存储条件,烘烤可以起到一定的性能恢复效果，烘烤条件:65±5℃,持续时间24H.

4.1.2 Static Electricity 静电

(1) The following procedures may decrease the possibility of ESD damage.

以下操作可降低静电破坏的可能性

(2) Minimize friction between the product and surroundings to avoid static buildup.

深圳市瑞豐光电子股份有限公司 受控专用章

将产品和外界之间的摩擦减到最低以避免静电产生.

(3) All production machinery and test instruments must be electrically grounded.

所有的产品设备和测试仪器必须接地.

(4) Operators must wear anti-static bracelets.

操作人员必须配戴静电环.

(5) Wear anti-static suit when entering work areas with conductive machinery.

进入带电设备工作区域时需穿防静电服.

(6) All workstations that handle IC and ESD-sensitive components must maintain an electrostatic potential of 150V or less.

所有操作 IC 和 ESD 敏感器件元器件的工作台必须保持低于 150V 的静电保护.

4.1.3 Reverse voltage protection 反压保护

In generally the reverse current of LED is very small, it can't effect using the component normally, but when it often suffered the reverse voltage which exceed the limits of the component than it will be damaged, the reverse current increases rapidly causing the string light display gray scale so when designing, please pay attention to control the reverse voltage we suggest the reverse voltage less than 10V.

通常 LED 的反向漏电流都会很小,不会影响正常使用. 如果长期遭受超过其所能承受的反向电压冲击时,LED 会损伤, 反向漏电流会迅速变大,引起显示屏零灰度下串光的发生. 在设计中, 要注意控制反向电压, 建议加在 LED 上的反向电压值不超过 10V.

4.1.4 The safe temperature for LEDs working 温度保护

The high temperature will make the LED's Luminous Intensity deceased radically, if LEDs worked in hot environment for a long time, they will be disabled easily. When LEDs are working in a closed array, we suggest that the LED's surface temperature should be lower than 55℃ and the leg's temperature should be lower than75℃.

LED 在高温条件下,衰减会加速,本身应力也会增大, 若长期处于高温环境下,极容易出现失效. 对于高密度排列使用的情况,建议在使用过程中灯面温度不超过 55℃, 灯脚温度不超过 75℃.

深圳市瑞豐光电子有限公司 承认专用章

4.1.5 Others 其它事项

Do not directly touch or handle the epoxy surface. It may damage the internal circuitry.
Handle the component along the side surfaces by using forceps or appropriate tools.
请勿直接触摸或操作环氧树脂表面，这可能会损坏内部的电路，拿取时用镊子或合适的工具夹在元件的侧边

4.1.6 Declare 申明

(1) This specification is written both in English and in Chinese and the latter is formal.
此规格书以中英文方式书写，若有冲突以中文版本为准.
(2) Both the customers and Refond will agree on official specifications of supplied products before a customer's volume production. The specification is valid only after be signed. And Refond reserves the right to further modify the specification for technical reference and sample without noticing the customers.
在量产供货前，瑞丰需与客户签署一份正式的产品规格书并各自备份。规格书签核后方有效，对于作为技术参考以及送样时提供的规格书，瑞丰保留进一步修改而不需通知客户的权力。

深圳市瑞丰光电子股份有限公司 承认专用章

Version History/修订历史

Date日期	Revisor修订者	Version版本	Verifier审核	Remarks备注
2019-03-15	谢乐平	E5	张国保	升级模板

深圳市瑞丰光电子股份有限公司 承认专用章

瑞豐光電 REFOND
www.refond.com

深圳市瑞丰光电子股份有限公司 承认专用章

Declare 申明

This specification is written both in English and in Chinese and the latter is formal.

产品规格书以中英文方式书写，若有冲突以中文版本为准。