SOP-8/PP

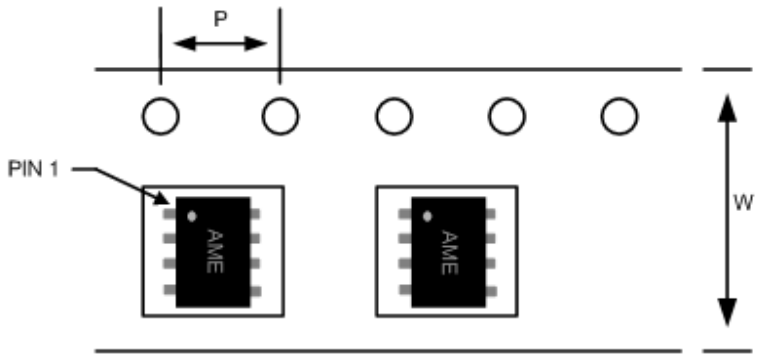


Carrier Tape, Number of Components Per Reel and Reel Size

| Package | Carrier Width (W) | Pitch (P) | Part Per Full Reel | Reel Size |
|---|---|---|---|---|
| SO-8/PP | 12.0±0.1 mm | 4.0±0.1 mm | 2500pcs | 330±1 mm |

台北市(114)內湖區瑞光路302號2樓
2F, 302 Rui-Guang Road, Nei-Hu District, Taipei 114, Taiwan
Tel: +886 2 2627.8687 Fax: +886 2 2659.2989 / +886 2 2659.9757