Features

Regulated Converters

- 6-Side Shielding
- External ON/OFF control
- 1.6kVDC Isolation
- UL/CSA/EN-60950-1 Certified
- 4:1 Input Voltage Range
- Continuous Short Circuit Protection
- Efficiency up to 89.5%
- Fixed Switching Frequency

RECOM

DC/DC Converter

REC30-Z

30 Watt 2“ x 1.6“ Single and Dual Output

3 YEAR warranty

Description

The REC30-xxxxS_DZ -series offer single and dual regulated outputs in a 2”x1.6” package with 1.6kVDC isolation and are suitable for higher power industrial applications. Remote on/off control is standard. The higher current outputs have raised output voltages to compensate for track losses as standard. The converter is fully certified to UL/EN/IEC safety standards.

Selection Guide

Part Number	Input Voltage Range (VDC)	Output Voltage (VDC)	Output Current (mA)	Efficiency typ. (%)	max. Capacitive Load [1] (µF)
REC30-243.4SZ	9-36	3.4	6000	86.5	10000
REC30-245.1SZ	9-36	5.1	6000	87.5	6800
REC30-2412SZ	9-36	12	2500	88.5	1800
REC30-2415SZ	9-36	15	2000	89	1000
REC30-2412DZ	9-36	±12	±1250	88.5	±800
REC30-2415DZ	9-36	±15	±1000	89	±500
REC30-483.4SZ	18-75	3.4	6000	87	10000
REC30-485.1SZ	18-75	5.1	6000	88	6800
REC30-4812SZ	18-75	12	2500	89	1800
REC30-4815SZ	18-75	15	2000	89.5	1000
REC30-4812DZ	18-75	±12	±1250	88	±800
REC30-4815DZ	18-75	±15	±1000	88.5	±500



E224736

Notes:

Note1: Max. capacitive load is tested at nominal input voltage and full load.

IEC/EN60950-1 Certified
UL60950 Certified
CSA C22.2 NO. 60950 Certified
EN55022 Certified

Model Numbering

REC30-_ _ _Z

nom. Input Voltage

Output Voltage

Single or **D**ual

Ordering Examples:

REC30-4812SZ, Single Output, 18-75Vin (4:1) and 12Vout

REC30-2412DZ, Dual Output, 9-36Vin (4:1) and ±12Vout

Specifications (measured at T_a= 25°C, nominal input voltage, full load and after warm up unless otherwise specified)

BASIC CHARACTERISTICS

Parameter	Condition		Min.	Typ.	Max.
Input Voltage Range	nom. Vin= 24V nom. Vin= 48V		9VDC 18VDC		36VDC 75VDC
Start/up Time				20ms	
	nom. Vin= 24V	DC-DC ON DC-DC OFF		8.3VDC 7.9VDC	
	nom. Vin= 48V	DC-DC ON DC-DC OFF		17.4VDC 16.7VDC	
Remote ON/OFF	DC-DC ON DC-DC OFF				Open or 3V<Vr<12V Short or 0V<Vr<1.2V
Operating Frequency				350kHz	
Minimum Load				0%	
Output Ripple and Noise [2]					100mVp-p

Notes:

Note2: Ripple and Noise is measured with a 20MHz bandwidth and a 0.1µF ceramic capacitor.

Efficiency vs. Load

REC30-485.1SZ

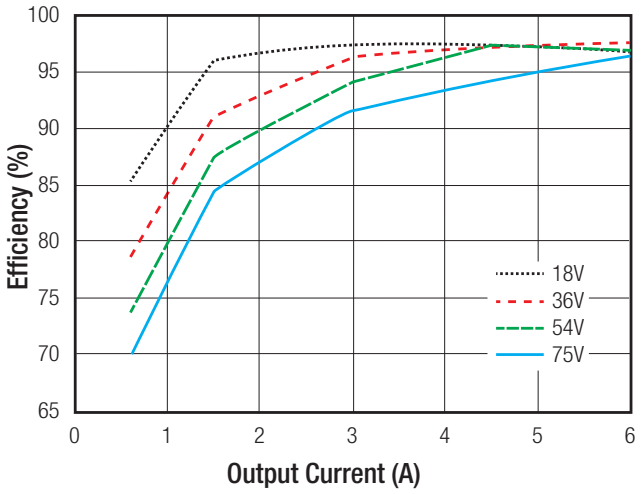

REC30-4815DZ

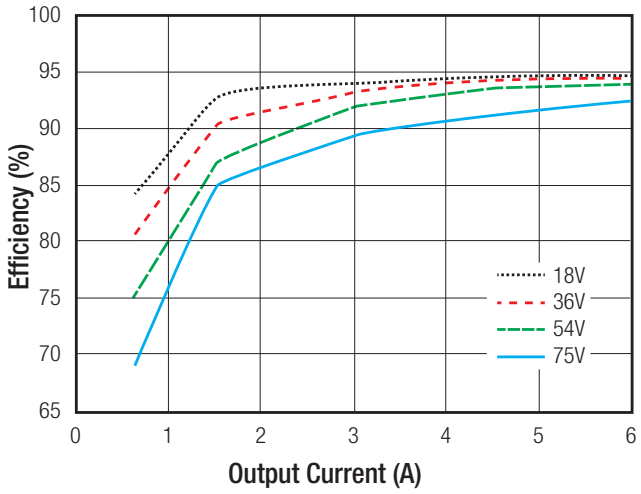

REGULATIONS

Parameter	Condition	Type	Values
Output Voltage Accuracy			±1% max.
Voltage Adjustability			±10% typ.
Line Voltage Regulation	low line to high line, full load		±0.2% max.
Load Voltage Regulation	10% to 100% load	single output dual output	±0.5% max. ±1% max.
Cross Regulation	25% to 100% load	dual output	±5% max.
Transient Response Recovery Time	25% load step change		250µS typ.

continued on next page

Specifications (measured at T_a= 25°C, nominal input voltage, full load and after warm up unless otherwise specified)

Deviation vs. Load

REC30-485.1SZ

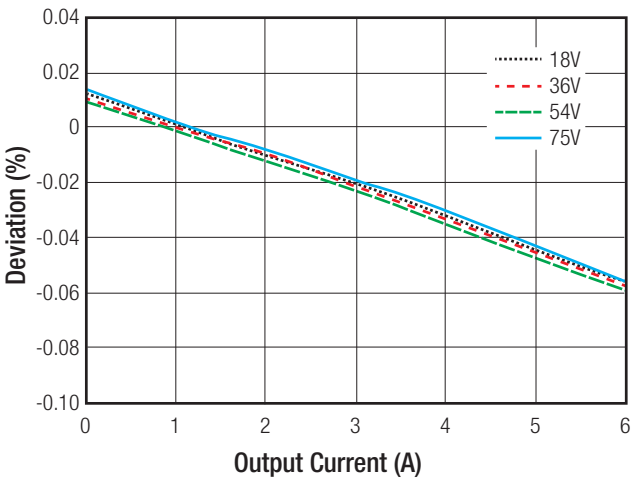

REC30-2415DZ

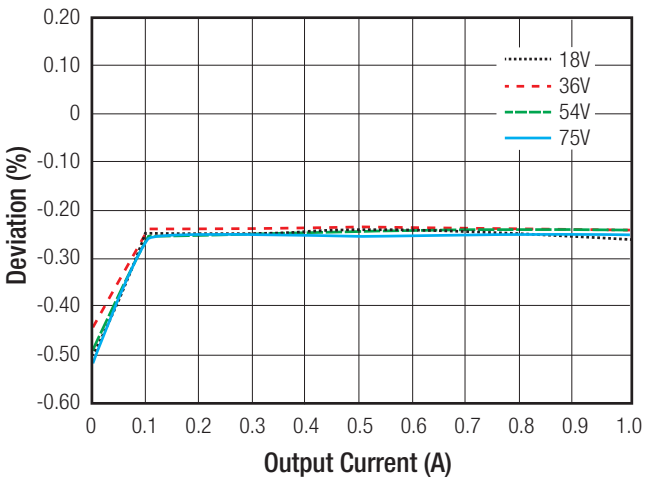

PROTECTIONS			
Parameter	**Condition**		**Value**
Short Circuit Protection (SCP)			continuous, automatic recovery
Over Voltage Protection (OVP)	Zener Diode Clamp	3.4Vout 5.1Vout 12Vout 15Vout	4VDC typ. 6.2VDC typ. 15VDC typ. 18VDC typ.
Over Load Protection (OLP)			180% typ.
Isolation Voltage	I/P to O/P		1.6kVDC / 1 minute
Isolation Capacitance			3900pF typ.
Isolation Resistance			1GΩ min.

ENVIRONMENTAL		
Parameter	**Condition**	**Value**
Operating Temperature Range	with derating	-40°C to +85°C
Maximum Case Temperature		+105°C
Temperatur Coefficient		±0.05%/°C
Thermal Impedance	natural convection	8°C/W
Operating Altitude		5000m
Operating Humidity	non-condensing	5% - 95% RH max.
Vibration		MIL-STD-202G
MTBF	according to MIL-HDBK-217F, 25°C, referring to REC30-2415DZ	1541 x 10^3 hours

continued on next page

Specifications (measured at T_a= 25°C, nominal input voltage, full load and after warm up unless otherwise specified)

Derating Graph

@ nominal input voltage, full load and natural convection (20LFM)

REC30-485.1SZ

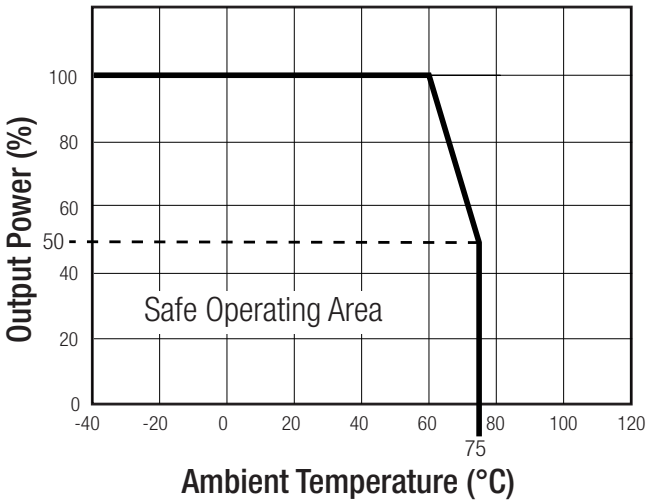

REC30-2415DZ

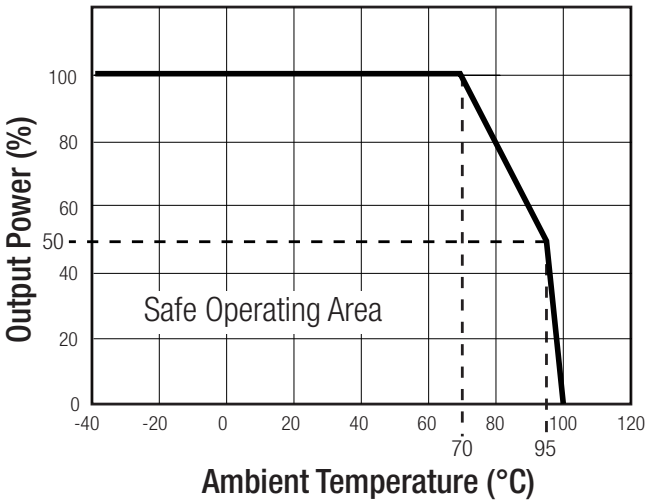

Notes:

Note3: For more details, please contact our technical support service at TechsupportAT@recom-power.com

SAFETY AND CERTIFICATIONS		
Certificate Type	**Report / File Number**	**Standard**
CB General Safety	E224736	IEC60950-1, 2nd Edition, 2013
UL General Safety	E224736	UL60950-1, 2nd Edition, 2014
EN General Safety	E224736	EN60950-1, 2nd Edition, 2013
CAN/CSA General Safety	E224736	C22.2 No. 60950-1-07, 2014
EMC Compliance	**Condition**	**Standard / Criterion**
EMI[4]	with external filter (see filter suggestions)	EN55022, Class A,B
ESD	Air: ±8kV; Contact: 4kV	EN61000-4-2, Criteria B
Radiated Immunity	10V/m	EN61000-4-3, Criteria A
Fast Transient	±1kV	EN61000-4-4, Criteria B
Surge[5]	±1kV	EN61000-4-5, Criteria A
Conducted Immunity	10Vr.m.s	EN61000-4-6, Criteria A
Power Magnetic Field	50Hz 1A/m (r.m.s)	EN61000-4-8, Criteria A

Notes:

Note4: REC30-Z Series can meet EN55022 Class A without an external filter; meets Class B with external filter.

Note5: An external MOV is required if the module has to meet EN61000-4-5. The MOV suggest: NichTek SVI32-380

continued on next page

Specifications (measured at T_a= 25°C, nominal input voltage, full load and after warm up unless otherwise specified)

EMC Filtering - Suggestions for Class B

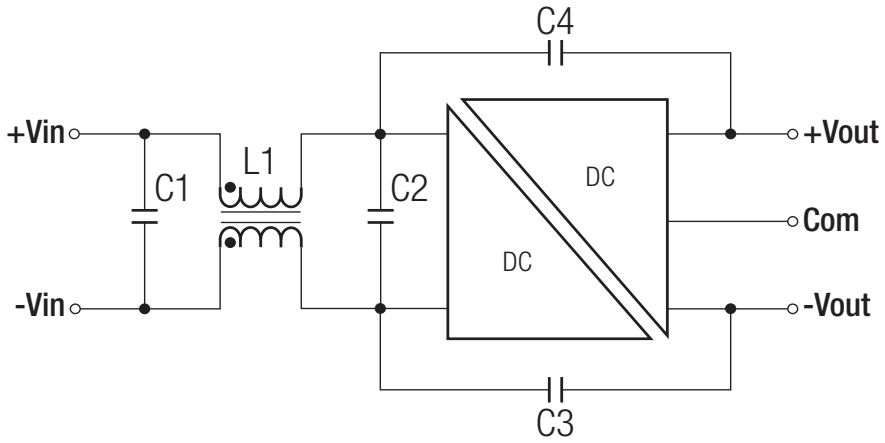

MODEL	C1	C2	L1	C3	C4
REC30-24xxSZ	330µF/50V	10µF/50V	1.3mH ref.:	2200pF/3kV	NA
REC30-48xxSZ	330µF/100V	10µF/100V	1.3m ref.:	2200pF/3kV	NA
REC30-24xxDZ	330µF/50V	10µF/50V	1.3mH ref.:	2200pF/3kV	2200pF/3kV
REC30-48xxDZ	330µF/100V	10µF/100V	1.3mH ref.:	2200pF/3kV	2200pF/3kV

DIMENSION and PHYSICAL CHARACTERISTICS

Parameter	Type	Value
Material	Case Base Potting	Nickel plated copper non conductive black plastic (UL94V-0) Epoxy
Package Dimension (LxWxH)		50.8 x 40.6 x 10.2mm
Package Weight		48g

Dimension Drawing (mm)

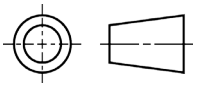

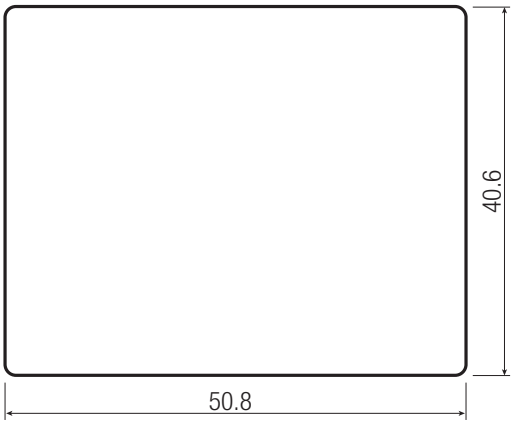

Specifications (measured at T_a= 25°C, nominal input voltage, full load and after warm up unless otherwise specified)

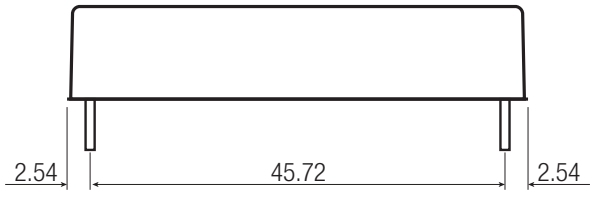

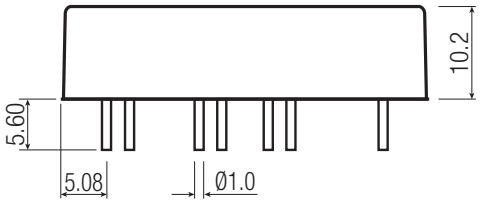

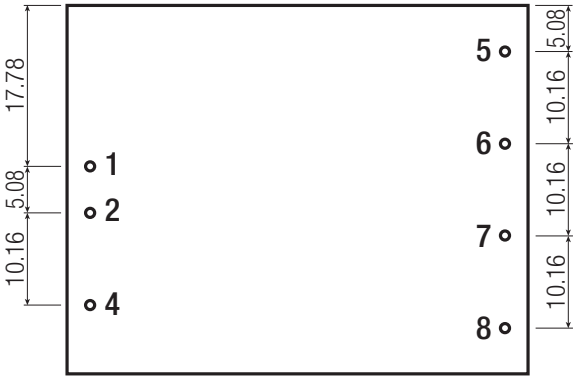

Pin Connections

Pin #	Single	Dual
1	+Vin	+Vin
2	-Vin	-Vin
4	Remote ON/OFF	
5	No Pin	+Vout
6	+Vout	Com
7	-Vout	-Vout
8	Trim	Trim

Tolerance: xx.x= ±0.5mm
xx.xx= ±0.35mm
Pin: ±0.05mm

INSTALLATION and APPLICATION

External Output Voltage Trimming

Trim up

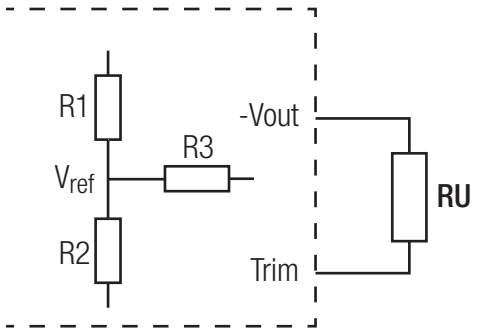

Trim down

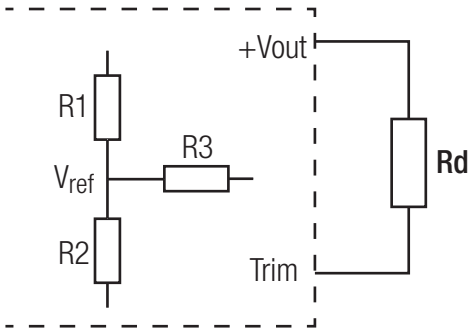

$$RU = \frac{aR2}{R2-a} - R3 \qquad a = \frac{Vref}{Vó - Vref} \times R1$$

$$Rd = \frac{bR1}{R1-b} - R3 \qquad b = \frac{Vref}{Vó - Vref} \times R2$$

Notes:

Note6: RU and Rd is mean trim resistor, please check the formula.
Note7: a & b: user define parameter, no actual meanings.
Note8: Vó is mean trim up/down voltage.
Note9: Value for R1, R2, R3 and Vref refer to table.

Output Voltage	3.4V	5.1V	12V	15V
R1	2.1K	2.55K	9.53K	9.09K
R2	1.198561K	2.449341K	2.498617K	1.810845K
R3	6.8K	9.76K	16.9K	13K
Vref	1.240	2.500	2.500	2.500

Specifications (measured at T_a= 25°C, nominal input voltage, full load and after warm up unless otherwise specified)

PACKAGING INFORMATION		
Packaging Dimension (LxWxH)	Tube	520.0 x 54.5 x 21.0mm
Packaging Quantity		11pcs
Storage Temperature Range		-55°C to +125°C

The product information and specifications are subject to change without prior notice. RECOM products are not authorized for use in safety-critical applications (such as life support) without RECOM's explicit written consent. A safety-critical application is defined as an application where a failure of a RECOM product may reasonably be expected to endanger or cause loss of life, inflict bodily harm or damage property. The buyer shall indemnify and hold harmless RECOM, its affiliated companies and its representatives against any damage claims in connection with the unauthorized use of RECOM products in such safety-critical applications.