Product data sheet
Characteristics

RE17RHMUS
Harmony, Modular timing relay, 8 A, 1 CO, 1 s..100 h, on delay, spring terminals, 24 V DC / 24...240 V AC/DC



Main

Range of Product	Harmony Timer Relays
Product or Component Type	Dual function relay
Discrete output type	Relay
Maximum Width	0.69 in (17.5 mm)
Device short name	RE17R
Time delay type	Interval
Time delay range	10...100 h 0.1...1 s 6...60 min 1...10 s 1...10 min 6...60 s 1...10 h
Nominal output current	8 A

Complementary

Contacts type and composition	1 C/O
Contacts material	Cadmium free
Maximum Height	3.54 in (90 mm)
Maximum Depth	2.83 in (72 mm)
Control type	Selector switch front panel
[Us] rated supply voltage	24...240 V AC 50/60 Hz 24 V DC
Voltage range	0.85...1.1 Us
Supply frequency	50...60 Hz +/- 5 %
Release of input voltage	10 V
Connections - terminals	Spring terminals, 2 x 0.2...2 x 1.5 mm² AWG 24...AWG 16) solid without cable end

Disclaimer: This documentation is not intended as a substitute for and is not to be used for determining suitability or reliability of these products for specific user applications

	Spring terminals, 2 x 0.2...2 x 1.5 mm² AWG 24...AWG 16) flexible without cable end
Housing material	Self-extinguishing
Repeat accuracy	+/- 0.5 % IEC 61812-1
Temperature Drift	+/- 0.05 %/°C
Voltage drift	+/- 0.2 %/V
Setting accuracy of time delay	+/- 10 % of full scale 25 °C IEC 61812-1
Control signal pulse width	100 ms with load in parallel typical 30 ms typical
Insulation resistance	100 MOhm 500 V DC IEC 60664-1
Reset time	120 ms on de-energisation typical
On-load factor	100 %
Power consumption in VA	0…32 VA 240 V AC
Maximum power consumption in W	0.6 W 24 V DC
Minimum switching current	10 mA 5 V DC
Maximum switching current	8 A AC/DC
Maximum switching voltage	250 V AC
Breaking capacity	2000 VA
Operating frequency	10 Hz
Electrical durability	100000 cycles resistive 8 A 250 V AC
Mechanical durability	10000000 cycles
Dielectric strength	2.5 kV 1 mA/1 minute 50 Hz IEC 61812-1
[Uimp] rated impulse withstand voltage	5 kV 1.2/50 µs
Power on delay	100 ms
Marking	CE
Creepage distance	4 kV/3 IEC 60664-1
Safety reliability data	B10d = 270000 MTTFd = 296.8 years
Mounting position	Any position in relation to normal vertical mounting plane
Mounting support	35 mm DIN rail conforming to EN/IEC 60715
Local signalling	LED indicator on steady: relay energised, no timing in progress LED indicator 80 % ON and 20 % OFF flashing: timing in progress LED indicator 5 % ON and 95 % OFF pulsing: relay de-energised, no timing in progress (except function Di-D, Li-L)
Net Weight	0.13 lb(US) (0.06 kg)
Time delay type	H, Ht
Functionality	On-delay timing
Compatibility code	RE17

Environment

Immunity to microbreaks	20 ms
Standards	EN 61000-6-4 EN 61000-6-1 2006/95/EC EN 61000-6-3 IEC 61812-1 2004/108/EC EN 61000-6-2
Product Certifications	CSA CULus DNV-GL EAC CCC
Ambient Air Temperature for Storage	-22…140 °F (-30…60 °C)
Ambient Air Temperature for Operation	-4…140 °F (-20…60 °C)
IP degree of protection	IP20 IEC 60529 terminal block) IP40 IEC 60529 housing) IP50 IEC 60529 front panel)

Vibration resistance	20 m/s² 10…150 Hz)IEC 60068-2-6
Shock resistance	15 gn 11 ms IEC 60068-2-27
Relative Humidity	93 % without condensation IEC 60068-2-30
Electromagnetic compatibility	Electrostatic discharge immunity test 6 kV in contact) level 3 IEC 61000-4-2 Electrostatic discharge immunity test 8 kV in air) level 3 IEC 61000-4-2 Susceptibility to electromagnetic fields 10 V/m 80 MHz to 1 GHz) level 3 IEC 61000-4-3 Electrical fast transient/burst immunity test 1 kV capacitive connecting clip) level 3 IEC 61000-4-4 Electrical fast transient/burst immunity test 2 kV direct) level 3 IEC 61000-4-4 1.2/50 µs shock waves immunity test 1 kV differential mode) level 3 IEC 61000-4-5 1.2/50 µs shock waves immunity test 2 kV common mode) level 3 IEC 61000-4-5 Conducted RF disturbances 10 V 0.15...80 MHz) level 3 IEC 61000-4-6 Voltage dips and interruptions immunity test 0 % 1 cycle) IEC 61000-4-11 Voltage dips and interruptions immunity test 70 % 25/30 cycles) IEC 61000-4-11 Conducted and radiated emissionsclass B EN 55022

Ordering and shipping details

GTIN	03606489861605
Nbr. of units in pkg.	1
Package weight(Lbs)	2.43 oz (69 g)

Packing Units

Unit Type of Package 1	PCE
Package 1 Height	1.10 in (2.8 cm)
Package 1 width	2.95 in (7.5 cm)
Package 1 Length	3.74 in (9.5 cm)

Offer Sustainability

Sustainable offer status	Green Premium product
California proposition 65	WARNING: This product can expose you to chemicals including: Lead and lead compounds, which is known to the State of California to cause cancer and birth defects or other reproductive harm. For more information go to www.P65Warnings.ca.gov
REACh Regulation	REACh Declaration
EU RoHS Directive	Pro-active compliance (Product out of EU RoHS legal scope) EU RoHS Declaration
Mercury free	Yes
RoHS exemption information	Yes
China RoHS Regulation	China RoHS declaration
Environmental Disclosure	Product Environmental Profile
Circularity Profile	End of Life Information
WEEE	The product must be disposed on European Union markets following specific waste collection and never end up in rubbish bins.

Dimensions

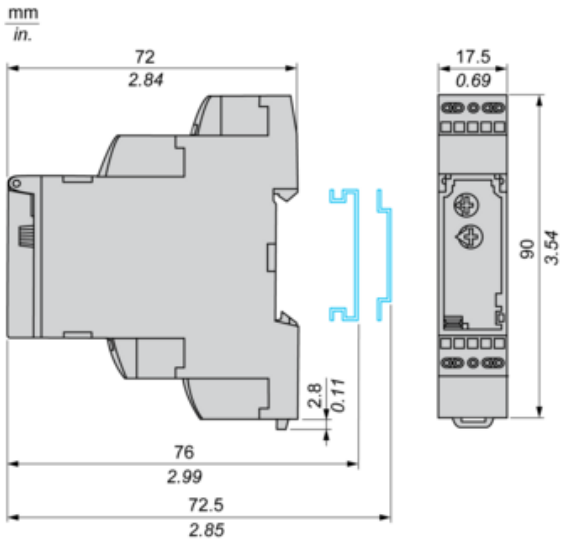

Internal Wiring Diagram

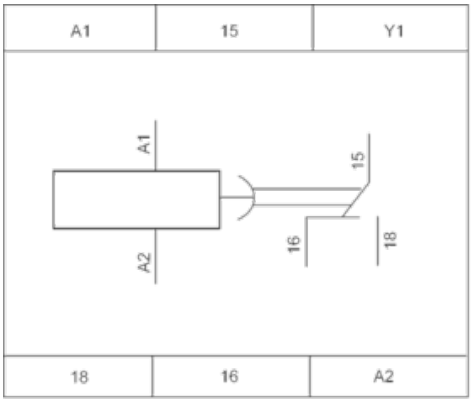

Wiring Diagram

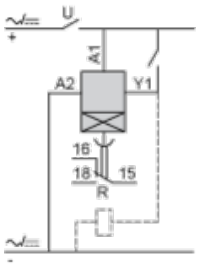

Function H : Interval Relay

Description

On energisation of the relay, timing period T starts and the output(s) R close(s). At the end of the timing period T, the output(s) R revert(s) to its/ their initial state. The second output can be either timed or instantaneous.

Function: 1 Output



Function: 2 Outputs

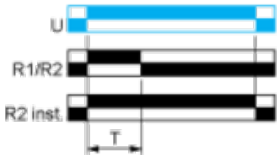

2 timed outputs (R1/R2) or 1 timed output (R1) and 1 instantaneous output (R2 inst.)

Function Ht: Interval Relay & With Pause / Summation Control

Description

On energisation of power supply, output(s) R close(s) and timing period T starts.

The timing can be interrupted / paused each time X1 energizes.

When the cumulative total of time periods elapsed reaches the pre-set value T, the output(s) R revert(s) to its/their initial state Reenergization of X1 will also cause output(s) R close(s) if the time has elapsed and restart the same operation as described at the beginning.

Except for RE17*, RE22R2MMW, RENF22R2MMW, RE22R2MMU and RE22R2MJU, timing can be interrupted / paused each time Y1 energizes.

The second output (R2) can be either timed (when set to “TIMED” or instantaneous (when set to “INST”).

Function: 1 Output

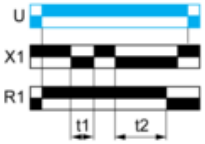

T = t1 + t2 +...

Function: 2 Outputs

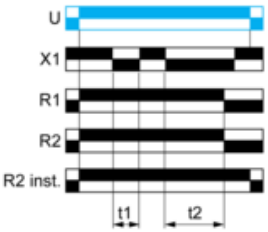

T = t1 + t2 +...

Function: 1 Output with Retrigger / Restart Control

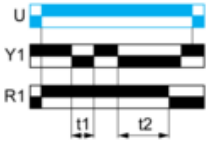

T = t1 + t2 +...

Function: 2 Outputs with Retrigger / Restart Control

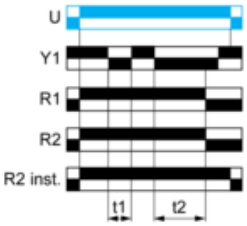

T = t1 + t2 +...

Legend

Relay de-energised

Relay energised

Output open

Output closed

C	Control contact
G	Gate
R	Relay or solid state output
R1/R2	2 timed outputs
R2 inst.	The second output is instantaneous if the right position is selected
T	Timing period
Ta -	Adjustable On-delay
Tr -	Adjustable Off-delay
U	Supply