CUI INC®

SERIES: RCP-01 | DESCRIPTION: RCA PLUG

FEATURES
- modular RCA plug connector
- available in multiple colors



RoHS

PART NUMBER KEY

RCP-01 X

Base Number

Color Options
1 = black
2 = red
3 = white
4 = yellow
5 = blue
6 = green

SPECIFICATIONS

parameter	conditions/description	min	typ	max	units
rated input voltage			12		Vdc
rated input current				5	A
contact resistance				30	mΩ
insulation resistance	at 500 Vdc	100			MΩ
voltage withstand	for 1 minute			500	Vac
operating temperature		-40		40	°C
life			5,000		cycles
flammability	UL94HB				
RoHS	2011/65/EU				

SOLDERABILITY

parameter	conditions/description	min	typ	max	units
hand soldering	for 3~5 seconds		340		°C

MECHANICAL DRAWING

units: mm[inches]
tolerance: ±0.3 mm
unless otherwise specified

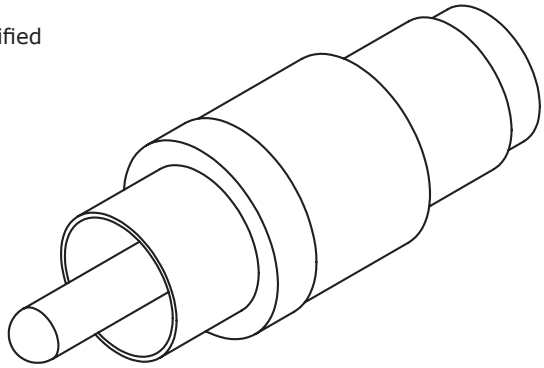

	MATERIAL	PLATING
earth terminal	brass	nickel
tip terminal	brass	nickel
barrel	brass	nickel
cover	ABS	color
barrel housing	ABS	color

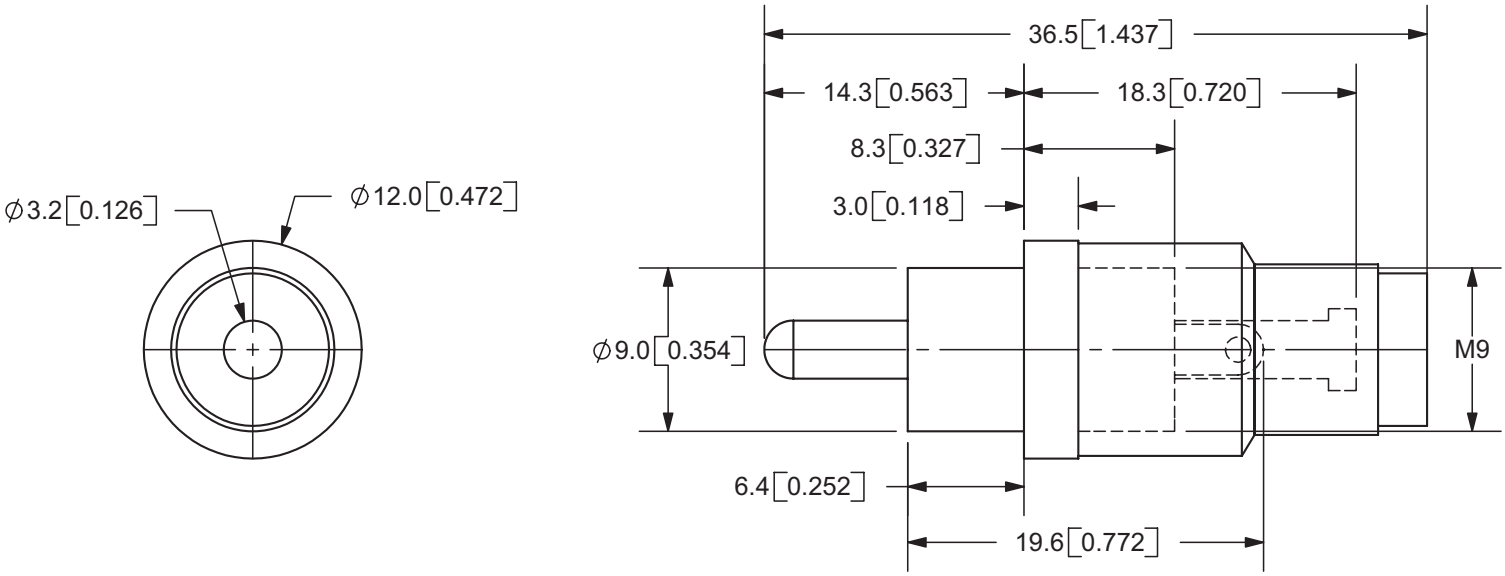

REVISION HISTORY

rev.	description	date
1.0	initial release	05/16/2006
1.01	applied new spec template	07/24/2015

The revision history provided is for informational purposes only and is believed to be accurate.

CUI INC®

Headquarters
20050 SW 112th Ave.
Tualatin, OR 97062
800.275.4899

Fax 503.612.2383
cui.com
techsupport@cui.com

CUI offers a one (1) year limited warranty. Complete warranty information is listed on our website.

CUI reserves the right to make changes to the product at any time without notice. Information provided by CUI is believed to be accurate and reliable. However, no responsibility is assumed by CUI for its use, nor for any infringements of patents or other rights of third parties which may result from its use.

CUI products are not authorized or warranted for use as critical components in equipment that requires an extremely high level of reliability. A critical component is any component of a life support device or system whose failure to perform can be reasonably expected to cause the failure of the life support device or system, or to affect its safety or effectiveness.