RC3005 THRU RC310

SINGLE-PHASE SILICON BRIDGE RECTIFIER

VOLTAGE：50-1000V **CURRENT：3.0A**

FEATURES

- Surge overload ratings-90 Amperes
- Good for printed circuit board assembly

MECHANICAL DATA

- ***Case***: Silicon rubber passivated
- ***Epoxy***: UL 94V-0 rate flame retardant
- ***Lead***: MIL-STD- 202E, Method 208 guaranteed
- ***Polarity***: As marked
- ***Mounting position***: Any
- ***Weight***: 1.88 grams

C-1

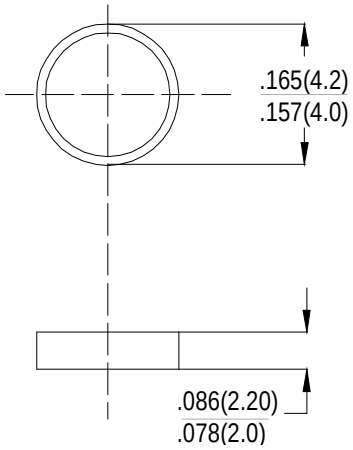

Dimensions in inches and (millimeters)

MAXIMUM RATINGS AND ELECTRONICAL CHARACTERISTICS

Ratings at 25℃ ambient temperature unless otherwise specified.
Single phase, half wave, 60Hz,resistive or inductive load.
For capacitive load, derate current by 20%.

		SYMBOL	RC3005	RC301	RC302	RC304	RC306	RC308	RC310	units
Maximum Recurrent Peak Reverse Voltage		V_{RRM}	50	100	200	400	600	800	1000	V
Maximum RMS Bridge Input Voltage		V_{RMS}	35	70	140	280	420	560	700	V
Maximum DC Blocking Voltage		V_{DC}	50	100	200	400	600	800	1000	V
Maximum Average Forward rectified Output Current at T_A=50°C		I_o	3.0							A
Peak Forward Surge Current 8.3ms single half sine-wave superimposed on rate load (JEDEC method)		I_{FSM}	90							A
Maximum Forward Voltage Drop per element at 3.0A DC		V_F	1.0							V
Maximum DC Reverse Current at Rated DC Blocking Voltage per element	@ T_A=25°C	I_R	5.0							μA
	@ T_A=100°C		500							
I^2t Rating for Fusing (t < 8.3ms)		I^2t	10							A^2S
Typical Junction Capacitance (Note 1)		C_J	25							pF
Typical Thermal Resistance (Note 2)		$R_{\theta JA}$	40							°C/W

Notes: 1.Measured at 1MHz and applied reverse voltage of 4.0 volts
2.Thermal Resistance from Junction to lead mounted on P.C.B with 0.47×0.47”(12×12mm) copper pads

PDF 文件使用 "pdfFactory Pro" 试用版本创建 www.fineprint.cn