Micro Commercial Components
20736 Marilla Street Chatsworth
CA 91311
Phone: (818) 701-4933
Fax: (818) 701-4939

RB421DS

0.1 Amp Schottky Barrier Rectifier 40 Volts

Features

- Lead Free Finish/RoHS Compliant ("P" Suffix designates RoHS Compliant. See ordering information)
- Small surface mounting type
- Low reverse current and low forward voltage
- High reliability
- Epoxy meets UL 94 V-0 flammability rating
- Moisture Sensitivity Level 1
- Marking: D3C
- Halogen free available upon request by adding suffix "-HF"

Maximum Ratings

Parameter	Symbol	Value	Unit
Peak Reverse Voltage	V_{RM}	40	V
DC Reverse Voltage	V_R	40	V
Mean Rectifying Current	I_O	100	mA
Peak Forward Surge Current	I_{FSM}	1	A
Junction Temperature	T_J	125	℃
Storage Temperature	T_{STG}	-40 to 125	℃

Electrical Characteristics @ 25◦C Unless Otherwise Specified

Parameter	Symbol	Min.	Typ.	Max.	Unit
Forward Voltage @ I_F=100mA @ I_F=10mA	V_F	---	---	0.55 0.34	V
Reverse Current @ V_R=10V	I_R	---	---	30	uA
Capacitance Between Terminals @V_R =10V, f=1MHz	C_T	---	6	---	pF

SOT-23

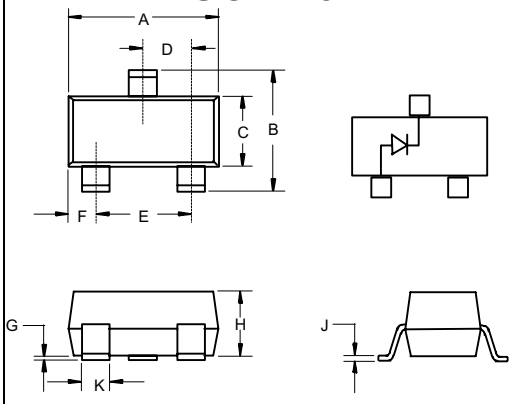

DIMENSIONS					
	INCHES		MM		
DIM	MIN	MAX	MIN	MAX	NOTE
A	.110	.120	2.80	3.04	
B	.083	.104	2.10	2.64	
C	.047	.055	1.20	1.40	
D	.035	.041	.89	1.03	
E	.070	.081	1.78	2.05	
F	.018	.024	.45	.60	
G	.0005	.0039	.013	.100	
H	.035	.044	.89	1.12	
J	.003	.007	.085	.180	
K	.015	.020	.37	.51	

Suggested Solder Pad Layout

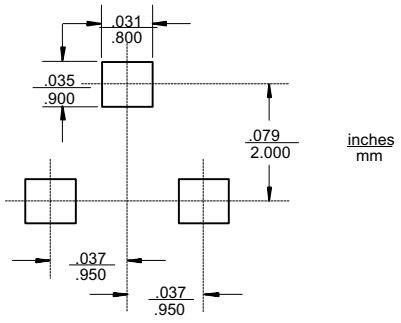

Micro Commercial Components

Ordering Information :

Device	Packing
Part Number-TP	Tape&Reel: 3Kpcs/Reel

Note : Adding "-HF" suffix for halogen free, eg. Part Number-TP-HF

*****IMPORTANT NOTICE*****

Micro Commercial Components Corp. reserves the right to make changes without further notice to any product herein to make corrections, modifications , enhancements , improvements , or other changes . ***Micro Commercial Components Corp .*** does not assume any liability arising out of the application or use of any product described herein; neither does it convey any license under its patent rights ,nor the rights of others . The user of products in such applications shall assume all risks of such use and will agree to hold ***Micro Commercial Components Corp .*** and all the companies whose products are represented on our website, harmless against all damages.

*****LIFE SUPPORT*****

MCC's products are not authorized for use as critical components in life support devices or systems without the express written approval of Micro Commercial Components Corporation.

*****CUSTOMER AWARENESS*****

Counterfeiting of semiconductor parts is a growing problem in the industry. Micro Commercial Components (MCC) is taking strong measures to protect ourselves and our customers from the proliferation of counterfeit parts. MCC strongly encourages customers to purchase MCC parts either directly from MCC or from Authorized MCC Distributors who are listed by country on our web page cited below. Products customers buy either from MCC directly or from Authorized MCC Distributors are genuine parts, have full traceability, meet MCC's quality standards for handling and storage. **MCC will not provide any warranty coverage or other assistance for parts bought from Unauthorized Sources.** MCC is committed to combat this global problem and encourage our customers to do their part in stopping this practice by buying direct or from authorized distributors.