Rotational Absolute Magnetic Kit Encoder Version 40 mm HP Displacement Sensor

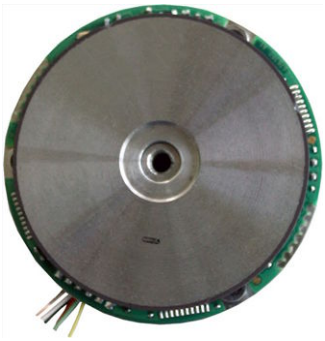

FEATURES

- Especially dedicated to hard conditions (vibrations, shocks, CEM, ...)
- Not sensitive to external magnetic fields and temperature
- Not sensitive to moisture and pollution
- Plug and play
- Small error due to misalignment
- Hall effect principle
- High Precision (HP)
- Protected design, patent EP 2711663
- Material categorization: for definitions of compliance please see www.vishay.com/doc?99912

DESIGN SUPPORT TOOLS

click logo to get started

3D Models Available

QUICK REFERENCE DATA	
Sensor type	ROTATIONAL, magnetic technology
Output type	Wires or cables
Market appliance	Industrial
Dimensions	Diameter 40.65 mm

ELECTRICAL SPECIFICATIONS	
PARAMETER	
Voltage supply	5 V ± 0.25 V (or 9 V to 35 V in option)
Current supply	≤ 110 mA max. at 5 V
Output	SSI (SPI on request)
Connection	Ultra-flex AWG32 wires (shielded cable and connector on request)
Useful electrical angle	360° (single turn)
Absolute accuracy at 25 °C	± 0.03° > 13 bits
Absolute accuracy at -40 °C to +105 °C	± 0.05° ~ 13 bits
Resolution	0.0017° (> 17 bits, 212 992 points)
Startup time	≤ 20 ms
Refresh time	≤ 100 µs
Latency time	≤ 200 µs
Sampling rate	10 kHz ± 5 %

MECHANICAL SPECIFICATIONS	
PARAMETER	
Mechanical angle	360°
Maximum speed rotation	50 rpm (up to 380 rpm with decreasing of accuracy, see “Maximum Speed vs. Accuracy” chart)
Maximum mechanical speed	9000 rpm (or more on request)
Weight	Rotor: 12 g ± 1 g; stator: 16.5 g ± 1 g

SAP PART NUMBERING GUIDELINES									
TYPE	MODEL	DESIGN	SIZE (mm)	TYPE	FUNCTION	ACCURACY (BITS)	RESOLUTION (BITS)	OUTPUT	PACKAGING
R = rotational	AM	K = kit	040	M	1	13	17	J = SSI CCW	B = box

For technical questions, contact: mcbprecisionpot@vishay.com

THIS DOCUMENT IS SUBJECT TO CHANGE WITHOUT NOTICE. THE PRODUCTS DESCRIBED HEREIN AND THIS DOCUMENT ARE SUBJECT TO SPECIFIC DISCLAIMERS, SET FORTH AT www.vishay.com/doc?91000

PERFORMANCE	
PARAMETER	
Operating temperature range	-40 °C to +105 °C (-55 °C to +105 °C on request)
Storage temperature range	-45 °C to +105 °C (-55 °C to +105 °C on request)
Acceleration	70 *g* for 1 s
Vibration	0.05 g^2/Hz, 20 Hz to 2000 Hz for 1 h along the three major axis
Shock	180 *g*, 14 ms, 1/2 sine
EMC	MIL-STD-461F - CS114: conducted susceptibility, bulk cable injection,10 kHz to 200 MHz table VI army ground level common mode injection and differential mode on positive - RS101: magnetic susceptibility, magnetic field, fig. RS101-2 from 30 Hz to 100 kHz - RS103: radiated susceptibility, electric field, 2 MHz to 18 GHz (level: 50 V/m) - RE102: radiated emissions, electric field, fig. RE102-4 - navy mobile and army - 10 kHz to 16 MHz
Humidity	HR ≤ 80 % (non-condensing)

MAXIMUM SPEED VS. ACCURACY CHART

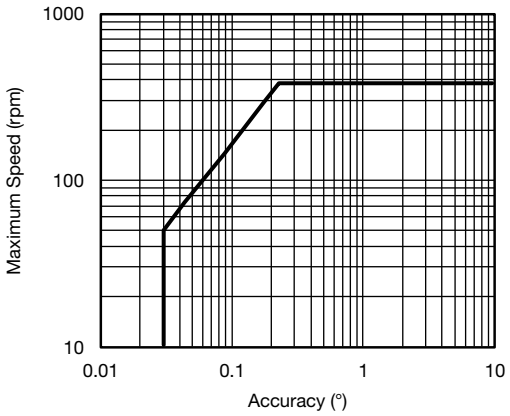

DIMENSIONS in millimeters

BASIC: AXIAL OUTPUT

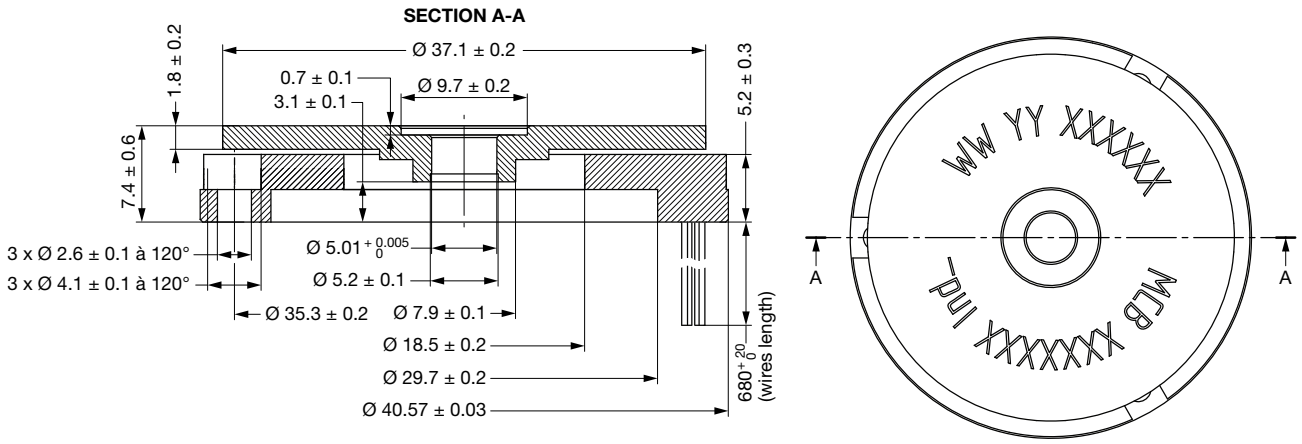

For technical questions, contact: mcbprecisionpot@vishay.com

THIS DOCUMENT IS SUBJECT TO CHANGE WITHOUT NOTICE. THE PRODUCTS DESCRIBED HEREIN AND THIS DOCUMENT ARE SUBJECT TO SPECIFIC DISCLAIMERS, SET FORTH AT www.vishay.com/doc?91000

DIMENSIONS in millimeters

OPTION ON REQUEST: ANOTHER INTERFACE FOR THE ROTOR

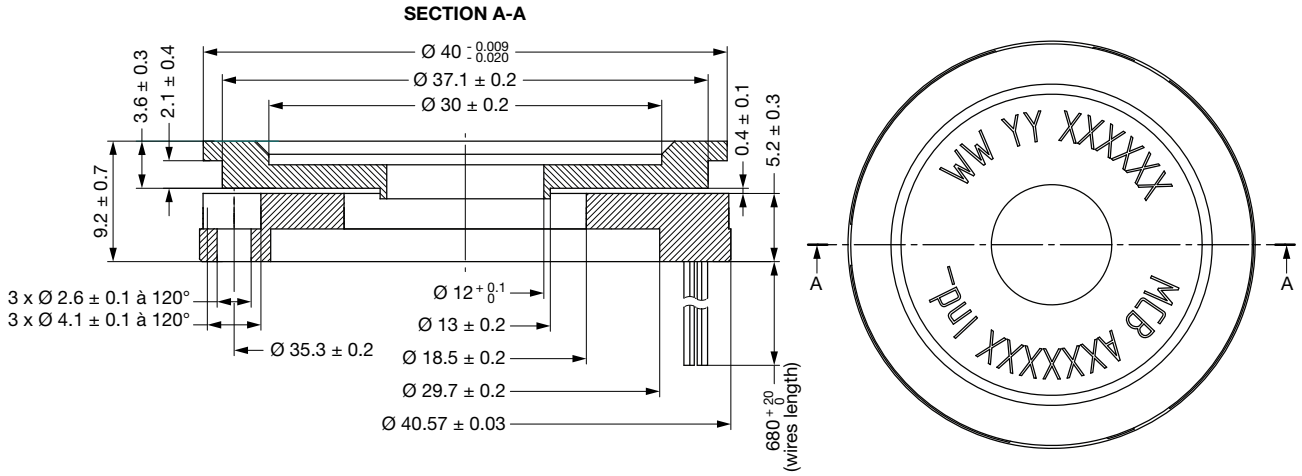

OPTION ON REQUEST: RADIAL OUTPUT

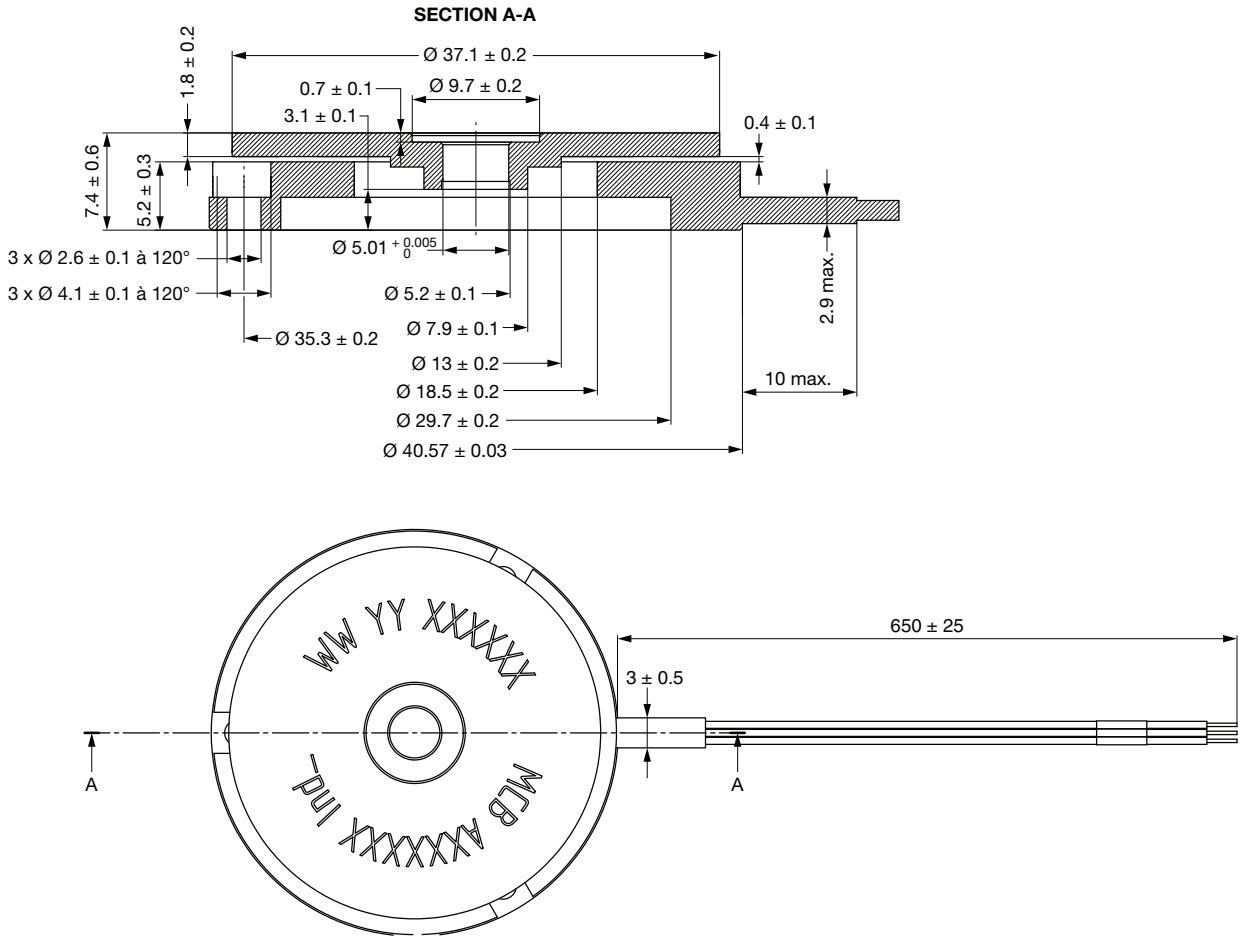

For technical questions, contact: mcbprecisionpot@vishay.com

THIS DOCUMENT IS SUBJECT TO CHANGE WITHOUT NOTICE. THE PRODUCTS DESCRIBED HEREIN AND THIS DOCUMENT ARE SUBJECT TO SPECIFIC DISCLAIMERS, SET FORTH AT www.vishay.com/doc?91000

ELECTRICAL INTERFACE DESCRIPTION - SSI INTERFACE

6 WIRES CONNECTIONS		
NAME	WIRE COLOR	
GND	Black	Blue (1)
+5 V	Red	White (1)
CLK+	White	Blue (1)
CLK-	Clear	White (1)
DATA+	Yellow	Blue (1)
DATA-	Green	White (1)

Note

(1) With marking sleeve (S, C, or D)

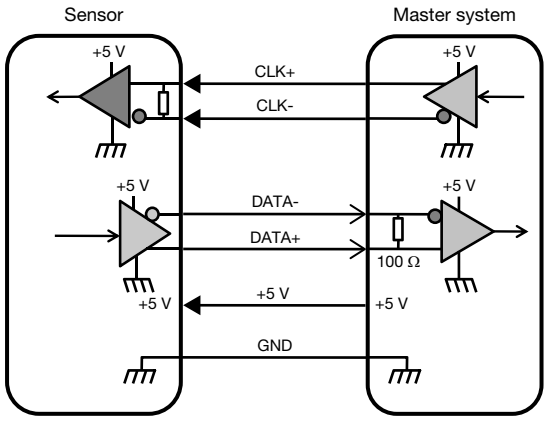

SSI PARAMETERS	
Output code	Binary
Data differential interface	RS422 according to EIA-RS422
CLK differential interface	RS422 according to EIA-RS422
Minimum clock frequency	300 kHz
Maximum clock frequency	4 MHz
Data bit (n)	18 bits

Timing Diagram

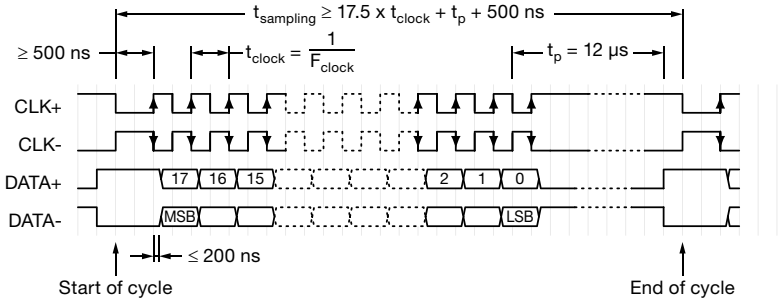

ELECTRICAL INTERFACE DESCRIPTION - SPI INTERFACE (on request)

5 WIRES CONNECTIONS	
NAME	WIRE COLOR
GND	Black
+5 V	Red
CLK	White
DATA	Clear
CS	Yellow

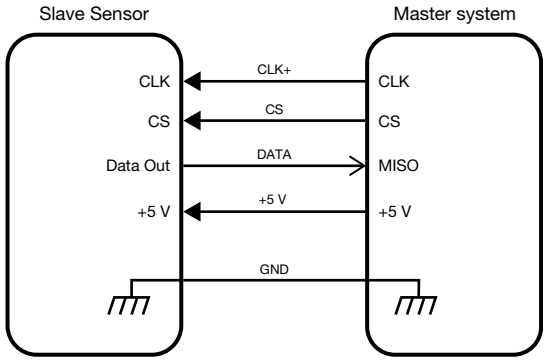

SPI PARAMETERS	
Output code	Binary
Minimum clock frequency	300 kHz
Maximum clock frequency	4 MHz
Data bit (n)	18 bits

Timing Diagram

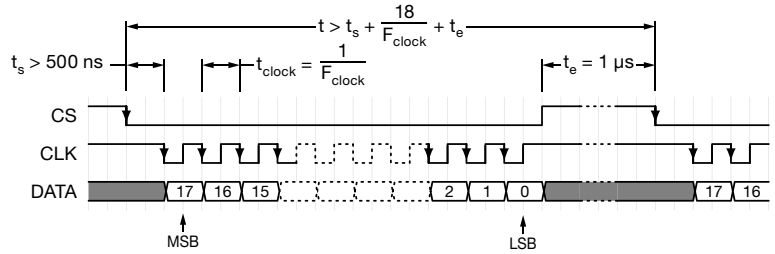

OPTIONS

- Other design on request (mechanical interfaces, electrical interfaces, ...)

For technical questions, contact: mcbprecisionpot@vishay.com

THIS DOCUMENT IS SUBJECT TO CHANGE WITHOUT NOTICE. THE PRODUCTS DESCRIBED HEREIN AND THIS DOCUMENT ARE SUBJECT TO SPECIFIC DISCLAIMERS, SET FORTH AT www.vishay.com/doc?91000

Disclaimer

ALL PRODUCT, PRODUCT SPECIFICATIONS AND DATA ARE SUBJECT TO CHANGE WITHOUT NOTICE TO IMPROVE RELIABILITY, FUNCTION OR DESIGN OR OTHERWISE.

Vishay Intertechnology, Inc., its affiliates, agents, and employees, and all persons acting on its or their behalf (collectively, “Vishay”), disclaim any and all liability for any errors, inaccuracies or incompleteness contained in any datasheet or in any other disclosure relating to any product.

Vishay makes no warranty, representation or guarantee regarding the suitability of the products for any particular purpose or the continuing production of any product. To the maximum extent permitted by applicable law, Vishay disclaims (i) any and all liability arising out of the application or use of any product, (ii) any and all liability, including without limitation special, consequential or incidental damages, and (iii) any and all implied warranties, including warranties of fitness for particular purpose, non-infringement and merchantability.

Statements regarding the suitability of products for certain types of applications are based on Vishay’s knowledge of typical requirements that are often placed on Vishay products in generic applications. Such statements are not binding statements about the suitability of products for a particular application. It is the customer’s responsibility to validate that a particular product with the properties described in the product specification is suitable for use in a particular application. Parameters provided in datasheets and / or specifications may vary in different applications and performance may vary over time. All operating parameters, including typical parameters, must be validated for each customer application by the customer’s technical experts. Product specifications do not expand or otherwise modify Vishay’s terms and conditions of purchase, including but not limited to the warranty expressed therein.

Except as expressly indicated in writing, Vishay products are not designed for use in medical, life-saving, or life-sustaining applications or for any other application in which the failure of the Vishay product could result in personal injury or death. Customers using or selling Vishay products not expressly indicated for use in such applications do so at their own risk. Please contact authorized Vishay personnel to obtain written terms and conditions regarding products designed for such applications.

No license, express or implied, by estoppel or otherwise, to any intellectual property rights is granted by this document or by any conduct of Vishay. Product names and markings noted herein may be trademarks of their respective owners.

© 2017 VISHAY INTERTECHNOLOGY, INC. ALL RIGHTS RESERVED