Features

Regulated Converters

- Compact AC-DC Power Supply
- 40 Watt PCB Mount Package
- Universal Input Voltage Range
- 4000VAC Isolation
- Low Output Ripple and Noise
- Short Circuit Protected

POWERLINE

AC/DC-Converter

RAC40-S_D_TA Series

40 Watt Single, Dual & Triple Output



Selection Guide

Part Number	Input Range (VAC)	Output Voltage (VDC)	Output Current (mA)	Efficiency (%)
RAC40-3.3SA	85-264	3.3	8000	75
RAC40-05SA	85-264	5	8000	79
RAC40-09SA	85-264	9	4444	82
RAC40-12SA	85-264	12	3333	83
RAC40-15SA	85-264	15	2666	83
RAC40-24SA	85-264	24	1666	83
RAC40-05DA	85-264	±5	±4000	79
RAC40-12DA	85-264	±12	±1666	83
RAC40-15DA	85-264	±15	±1320	83
RAC40-0512DA	85-264	5/12	5000/1250	80
RAC40-0524DA	85-264	5/24	5000/625	80
RAC40-0512TA	85-264	5/±12	+5000/±600	80
RAC40-0515TA	85-264	5/±15	+5000/±500	80

Specifications

(typical at 25°C, nominal input voltage and after warm up time unless otherwise specified)

Input Voltage Range		90-264VAC or 100-370VDC
Rated Power		40 Watts max.
Input Frequency Range (for AC Input)		47-440Hz
Input Current (full load)		860mA max. (115VAC) / 460mA max. (230VAC)
Inrush Current (<2ms)		20A max. (115VAC) / 30A max. (230VAC)
Leakage Current		0.2mA max.
Output Voltage Accuracy (Full load)		Single, Dual Outputs ±1% max. Others: Main Output ±3% max., Secondary Output(s) ±5% max.
Line Voltage Regulation (low line, high line at full load) - See Note 1		±0.5% max.
Load Voltage Regulation (10% to 100% symmetric load) - See Note 2		±1% max.
Cross Regulation (Dual, Triple Outputs)		Main Outputs ±5%, Secondary Outputs ±7% typ.
Output Ripple and Noise (20MHz limited) - See Note 3		1% Vout max.
Operating Frequency		132kHz typ.
Isolation Voltage (input to output)		4000VAC min.
Temperature Coefficient		±0.01%/°C typ.
Isolation Resistance		100 MΩ min.
Short Circuit Protection		Continuous, Automatic Restart
Overcurrent Protection		105% typ.
Over Temeperature Protection		100°C
Operating Temperature Range (free air convection, with derating)		-25°C to +70°C
Storage Temperature Range		-40°C to +100°C
Humidity		95% RH max.
Case Material		Epoxy with Fibreglass (UL94V-0)
Package Weight		280g
MTBF (+25°C)	using MIL-HDBK-217F	200~400 x 10^3 hours

UL-60601 Certified

RECOM

Description

Compact switching power module for PCB or DIN-rail mounting with medical certification UL-60601-1.

Derating Graph

(Ambient Temperature)

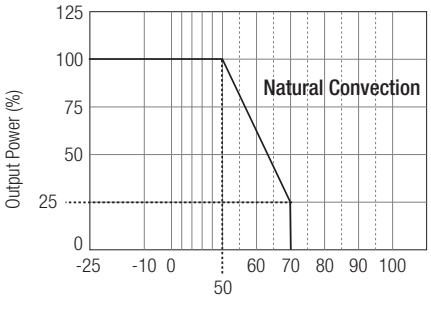

Simplified Schematics

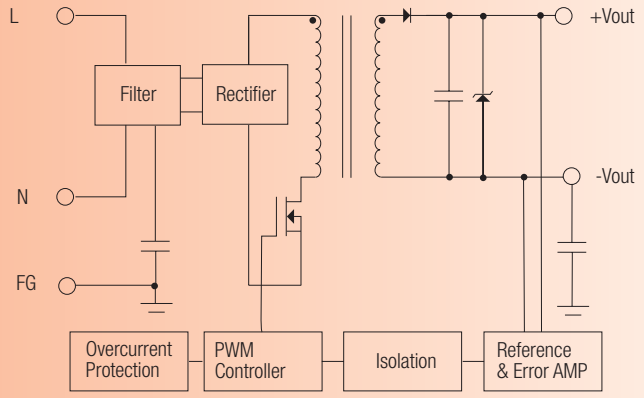

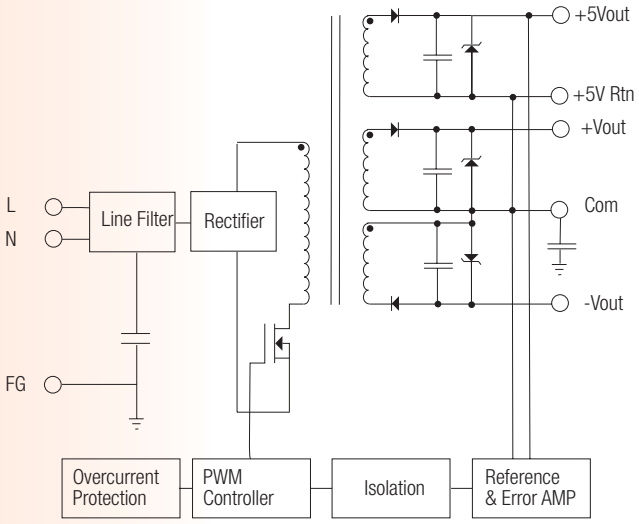

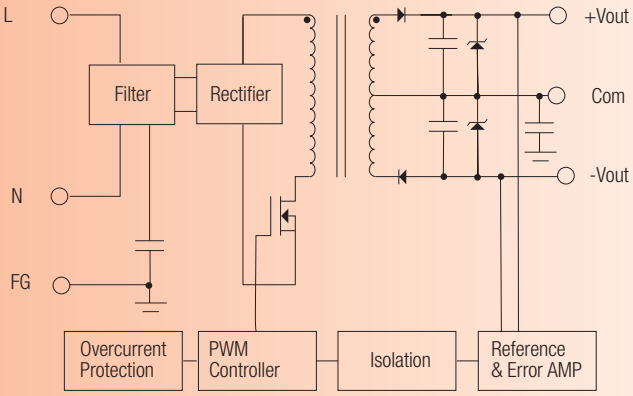

Notes

Note 1: Line Regulation = 5% max. for Auxilary Outputs

Note 2: Load Regulation = 7% max. for Auxilary Outputs

Note 3: Ripple & Noise measured with 20MHz BW probe and 0.1µF + 47µF capacitors in parallel across the outputs.
Ripple and Noise = 50mV typ. for 3.3V Output.

Package Style and Pinning

3rd angle projection

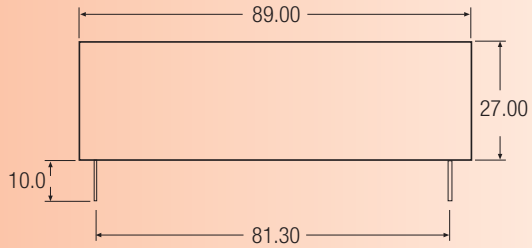

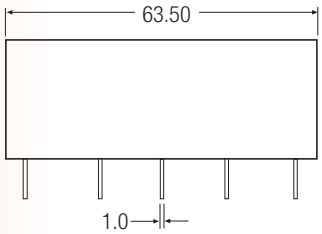

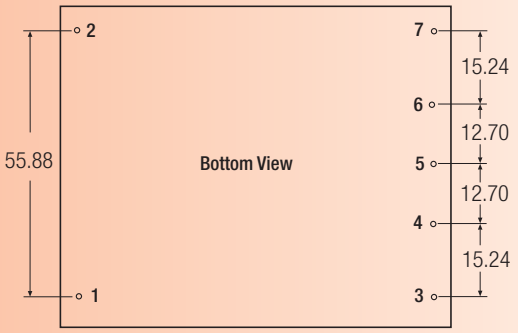

Pin Connections

Pin #	Single Out	Dual Out	5/12(15)	Triple Out
1	VAC in (L)	VAC in (L)	VAC in (L)	VAC in (L)
2	VAC in (N)	VAC in (N)	VAC in (N)	VAC in (N)
3	+VDC out	+VDC out	+12V(15V)	+12V(15V)
4	No Pin	No Pin	+5V Out	+5V Out
5	-VDC out	Com	+12V(15V) Rtn	Com
6	No Pin	No Pin	+5V Rtn	+5V Rtn
7	NC	-VDC out	No Pin	-12V(15V)

Tolerance =± 0.5 mm