Micro Commercial Components
20736 Marilla Street Chatsworth
CA 91311
Phone: (818) 701-4933
Fax: (818) 701-4939

RA501GP THRU RA507GP

50.0 Amp High Current Glass Passivated Rectifier 50 to 1000 Volts

Features

- Plastic Material Used Carriers Underwrites Laboratory Classification 94V-O
- Low Cost Construction Utilizing Void-free Molded Plastic Technique
- High Surge Capability, Glass Passivated Chip
- Diffused Junction

Maximum Ratings

- Operating & Storage Temperature: -55°C to +175°C
- For Capacitive Load, Derate Current by 20%

MCC Part Number	Maximum Recurrent Peak Reverse Voltage	Maximum RMS Voltage	Maximum DC Blocking Voltage
RA501GP	50V	35V	50V
RA502GP	100V	70V	100V
RA503GP	200V	140V	200V
RA504GP	400V	280V	400V
RA505GP	600V	420V	600V
RA506GP	800V	560V	800V
RA507GP	1000V	700V	1000V

Electrical Characteristics @ 25°C Unless Otherwise Specified

Average Forward Current	$I_{F(AV)}$	50.0A	T_C=135°C
Peak Forward Surge Current	I_{FSM}	500A	8.3ms half sine
Maximum Instantaneous Forward Voltage	V_F	1.1V	I_{FM}=50.0A T_A=25°C
Maximum DC Reverse Current At Rated DC Blocking Voltage	I_R	5.0uA	T_C=25°C
Typical Reverse Recovery Times	t_{rr}	3.0us	I_F=0.5A, I_R=1.0A, I_{rr}=0.25A
Typical Junction Capacitance	C_j	300pF	Measured at 1.0MHz, V_R=4.0V

RA

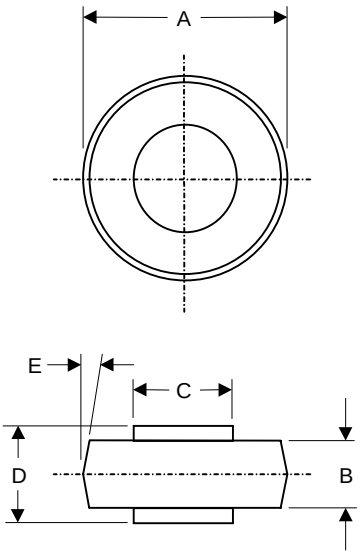

DIMENSION					
DIM	INCHES		MM		NOTE
	MIN	MAX	MIN	MAX	
A	.380	.410	9.70	10.40	
B	.165	.185	4.19	4.70	
C	.215	.225	5.50	5.70	
D	.235	.250	6.00	6.40	
E	-----	5°	-----	5°	NOM

RATINGS AND CHARACTERISTIC CURVES

FIG.1- MAXIMUM FORWARD CURRENT DERATING CURVE

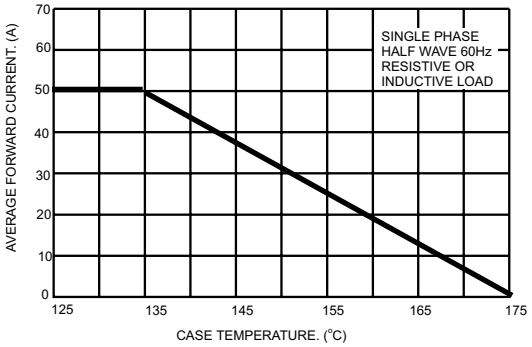

FIG.2- MAXIMUM NON-REPETITIVE PEAK FORWARD SURGE CURRENT

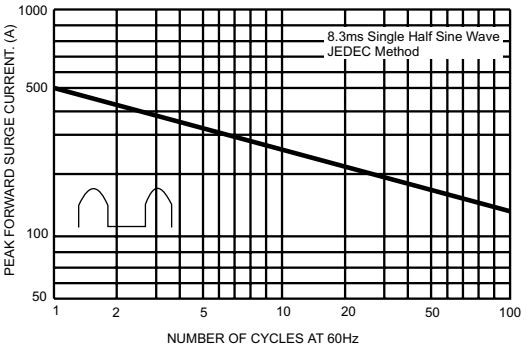

FIG.3- TYPICAL FORWARD CHARACTERISTICS

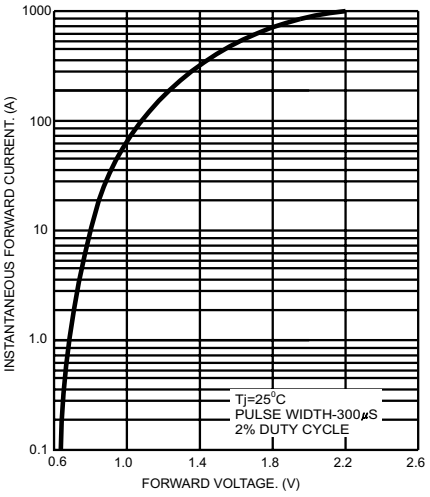

FIG.4- TYPICAL REVERSE CHARACTERISTICS

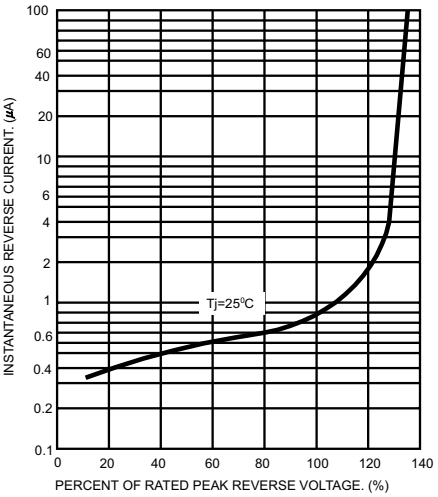

FIG.5- TYPICAL JUNCTION CAPACITANCE

