Solid State Relays
Industrial, 1-Phase ZS, Standard Range
Types RA 24.. .. 06/RA 44.. .. 08/RA 48.. .. 12



- **AC Solid State Relay**
- **Zero switching**
- **Direct copper bonding technology**
- **Rated operational current: 10, 25, 50 and 90 AACrms**
- **Blocking voltage: Up to 1200 V_p**
- **Rated operational voltage: Up to 480 VACrms**
- **3 input ranges: 3 to 32 VDC, 10 to 90 VAC/DC and 90 to 280 VAC/DC**
- **Isolation: OPTO (input-output) 4000 VACrms**

Product Description

The zero switching relay with antiparallel thyristor output is the most widely used industrial SSR due to its multiple application possibilities. The relay can be used for resistive, inductive and capacitive loads. The zero switching relay switches ON when the sine curve just crosses zero and switches OFF when the current crosses zero.

Ordering Key

RA 24 10 LA 06

- **Solid State Relay**
- **Switching mode**
- **Rated operational voltage**
- **Rated operational current**
- **Control voltage**
- **Blocking voltage**

Type Selection

Switching mode	Rated operational voltage	Rated operational current	Control voltage	Blocking voltage
A: Zero switching	24: 230 VACrms 44: 400 VACrms 48: 480 VACrms	10: 10 AACrms 25: 25 AACrms 50: 50 AACrms 90: 90 AACrms	-D: 3 to 32 VDC LA: 10 to 90 VAC/DC HA: 90 to 280 VAC/DC	06: 650 V_p 08: 850 V_p 12: 1200 V_p

Selection Guide

Rated operational voltage	Blocking voltage	Control voltage	Rated operational current 10 AACrms	25 AACrms	50 AACrms	90 AACrms
230 VACrms	650 V_p	3 to 32 VDC	**RA 2410 -D 06**	**RA 2425 -D 06**	**RA 2450 -D 06**	**RA 2490 -D 06**
		10 to 90 VAC/DC	**RA 2410 LA 06**	**RA 2425 LA 06**	**RA 2450 LA 06**	**RA 2490 LA 06**
		90 to 280 VAC/DC	**RA 2410 HA 06**	**RA 2425 HA 06**	**RA 2450 HA 06**	**RA 2490 HA 06**
400 VACrms	850 V_p	3 to 32 VDC	**RA 4410 -D 08**	**RA 4425 -D 08**	**RA 4450 -D 08**	**RA 4490 -D 08**
		10 to 90 VAC/DC	**RA 4410 LA 08**	**RA 4425 LA 08**	**RA 4450 LA 08**	**RA 4490 LA 08**
		90 to 280 VAC/DC	**RA 4410 HA 08**	**RA 4425 HA 08**	**RA 4450 HA 08**	**RA 4490 HA 08**
480 VACrms	1200 V_p	3 to 32 VDC	**RA 4810 -D 12**	**RA 4825 -D 12**	**RA 4850 -D 12**	**RA 4890 -D 12**
		10 to 90 VAC/DC	**RA 4810 LA 12**	**RA 4825 LA 12**	**RA 4850 LA 12**	**RA 4890 LA 12**
		90 to 280 VAC/DC	**RA 4810 HA 12**	**RA 4825 HA 12**	**RA 4850 HA 12**	**RA 4890 HA 12**

Specifications are subject to change without notice (28.02.2007)

CARLO GAVAZZI

General Specifications

	RA 24.. .. 06	RA 44.. .. 08	RA 48.. .. 12
Operational voltage range	24 to 280 VACrms	42 to 480 VACrms	42 to 530 VACrms
Blocking voltage	≥ 650 V_p	≥ 850 V_p	≥ 1200 V_p
Zero voltage turn-on	≤ 20 V	≤ 40 V	≤ 40 V
Operational frequency range	45 to 65 Hz	45 to 65 Hz	45 to 65 Hz
Power factor	≥ 0.5 @ 230 VACrms	≥ 0.5 @ 400 VACrms	≥ 0.5 @ 480 VACrms
Approvals	UL, CSA	UL, CSA	UL, CSA

Input Specifications

	RA .... -D ..	RA .... LA ..	RA .... HA ..
Control voltage range	3 to 32 VDC	10 to 90 VAC/DC	90 to 280 VAC/DC
Pick-up voltage	≤ 3 VDC	≤ 10 VAC/DC	≤ 90 VAC/DC
Drop-out voltage	≥ 1 VDC	≥ 1 VAC/DC	≥ 10 VAC/DC
Reverse voltage	≤ 32 VDC		
Input impedance	1.5 kΩ	5.4 kΩ	44 kΩ
Response time pick-up	≤ 1/2 cycle	≤ 1 cycle	≤ 1 cycle
Control pulse width	≥ 0.5 ms	≥ 0.5 ms	≥ 0.5 ms
Response time drop-out	≤ 1/2 cycle	≤ 1/2 cycle	≤ 1/2 cycle

Output Specifications

	RA ..10	RA ..25	RA ..50	RA ..90 .. ..
Rated operational current AC 51 AC 53a	16 Arms 3 Arms	25 Arms 5 Arms	50 Arms 15 Arms	90 Arms 20 Arms
Minimum operational current	150 mArms	150 mArms	250 mArms	400 mArms
Rep. overload current t=1 s	≤ 35 Arms	≤ 55 Arms	≤ 125 Arms	≤ 150 Arms
Non-rep. surge current t=10 ms	160 A_p	325 A_p	600 A_p	1150 A_p
Off-state leakage current @ rated voltage and frequency	≤ 2.5 mArms	≤ 3 mArms	≤ 3 mArms	≤ 3 mArms
I^2t for fusing t=10 ms	≤ 130 A^2s	≤ 525 A^2s	≤ 1800 A^2s	≤ 6600 A^2s
On-state voltage drop @ rated current	≤ 1.6 Vrms	≤ 1.6 Vrms	≤ 1.6 Vrms	≤ 1.6 Vrms
Critical dV/dt commutating	≥ 500 V/µs	≥ 500 V/µs	≥ 500 V/µs	≥ 500 V/µs
Critical dV/dt off-state	≥ 500 V/µs	≥ 500 V/µs	≥ 500 V/µs	≥ 500 V/µs

Thermal Specifications

	RA ..10	RA ..25	RA ..50	RA ..90 .. ..
Operating temperature	-20° to +70°C (-4° to +158°F)	-20° to +70°C (-4° to +158°F)	-20° to +70°C (-4° to +158°F)	-20° to +70°C (-4° to +158°F)
Storage temperature	-40° to +100°C (-40° to +212°F)	-40° to +100°C (-40° to +212°F)	-40° to +100°C (-40° to +212°F)	-40° to +100°C (-40° to +212°F)
Junction temperature	≤ 125°C (≤ 257°F)	≤ 125°C (≤ 257°F)	≤ 125°C (≤ 257°F)	≤ 125°C (≤ 257°F)
R_{th} junction to case	≤ 2.0 K/W	≤ 1.25 K/W	≤ 0.65 K/W	≤ 0.3 K/W
R_{th} junction to ambient	≤ 12.5 K/W	≤ 12 K/W	≤ 12 K/W	≤ 12 K/W

Isolation

Rated isolation voltage Input to output	≥ 4000 VACrms
Rated isolation voltage Output to case	≥ 4000 VACrms
Insulation resistance Input to output	≥ 10^{10} Ω
Insulation resistance Ouput to case	≥ 10^{10} Ω
Insulation capacitance Input to output	≤ 8 pF
Insulation capacitance Output to case	≤ 100 pF

Accessories

Protection cover
Heatsinks
DIN rail adapter
Varistors
Fuses

For further information refer to "General Accessories".

Wiring Diagram

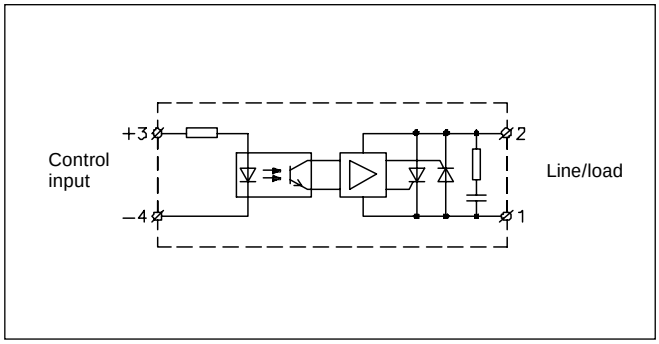

Functional Diagram

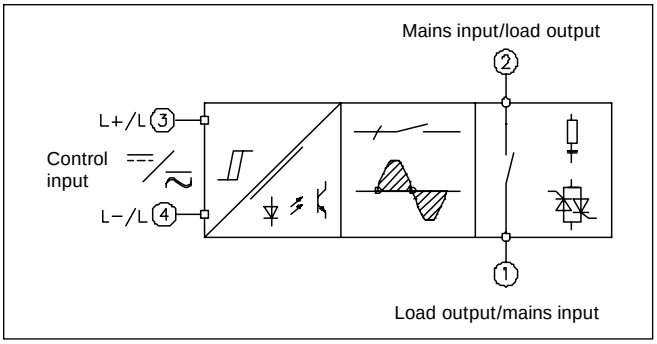

Dimensions

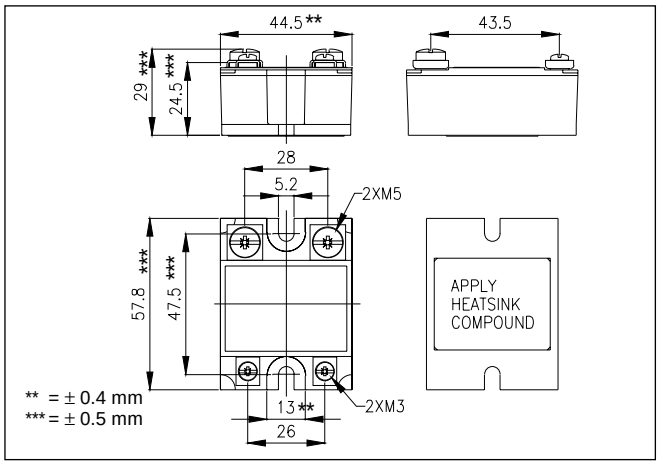

All dimensions in mm

Housing Specifications

Weight		Approx. 110 g
Housing material		Noryl GFN 1, black
Base plate	10, 25, 50 A	Aluminium, nickel-plated
	90 A	Copper, nickel-plated
Potting compound		Polyurethane
Relay		
Mounting screws		M5
Mounting torque		≤ 1.5 Nm
Control terminal		
Mounting screws		M3 x 6
Mounting torque		≤ 0.5 Nm
Power terminal		
Mounting screws		M5 x 6
Mounting torque		≤ 2.4 Nm

Specifications are subject to change without notice (28.02.2007)

Heatsink Dimensions (load current versus ambient temperature)

RA ..10 .. ..

Load current [A]	Thermal resistance [K/W]						Power dissipation [W]
16	2.7	2.2	1.8	1.3	0.87	0.41	22
15	3.1	2.6	2.1	1.7	1.2	0.65	20
14	3.7	3,1	2.6	2	1.5	0.92	18
13	4.3	3.7	3.1	2.5	1.9	1.2	16
12	5	4.3	3.7	3	2.3	1.6	15
11	5.9	5.1	4.4	3.6	2.8	2.1	13
10	6.9	6	5.2	4.3	3.5	2.6	12
9	7.9	6.9	5.9	4.9	4	3	10
7	10.8	9.5	8.1	6.8	5.4	4.1	7
5	-	14.2	12.2	10.2	8.1	6.1	5
3	-	-	-	-	14.6	10.9	3
1	-	-	-	-	-	-	1
	20	30	40	50	60	70	T_A

Ambient temp. [°C]

RA ..25 .. ..

Load current [A]	Thermal resistance [K/W]						Power dissipation [W]
25	2	1.7	1.4	1	0.71	0.40	32
22.5	2.5	2.1	1.8	1.4	1	0.66	27
20	3.1	2.7	2.3	1.9	1.4	1	23
17.5	4.	3.5	3	2.5	2	1.4	20
15	4.9	4.3	3.7	3.1	2.5	1.9	16
12.5	6.2	5.4	4.6	3.9	3.1	2.3	13
10	8.1	7.1	6.1	5.1	4	3	10
7.5	11.3	9.9	8.5	7.1	5.6	4.2	7
5	-	15.6	13.3	11.1	8.9	6.7	5
2.5	-	-	-	-	18.7	14	2
	20	30	40	50	60	70	T_A

Ambient temp. [°C]

RA ..50 .. ..

Load current [A]	Thermal resistance [K/W]						Power dissipation [W]
50	0.92	0.76	0.60	0.45	0.29	-	63
45	1.2	0.99	0.80	0.62	0.44	0.26	55
40	1.5	1.3	1.1	0.85	0.63	0.42	47
35	1.9	1.6	1.4	1.1	0.89	0.63	40
30	2.4	2.1	1.8	1.5	1.2	0.91	33
25	3	2.7	2.3	1.9	1.5	1.1	26
20	3.9	3.5	3	2.5	2	1.5	20
15	5.5	4.8	4.1	3.4	2.7	2.1	15
10	8.6	7.5	6.4	5.4	4.3	3.2	9
5	17.9	15.6	13.4	11.2	8,9	6.7	4
	20	30	40	50	60	70	T_A

Ambient temp. [°C]

RA ..90 .. ..

Load current [A]	Thermal resistance [K/W]						Power dissipation [W]
90	0.63	0.53	0.42	0.32	-	-	97
80	0.81	0.69	0.57	0.45	0.33	-	84
70	1	0.89	0.75	0.61	0.47	0.33	71
60	1.3	1.2	1	0.83	0.66	0.49	59
50	1.7	1.5	1.3	1.1	0.85	0.64	47
40	2.2	1.9	1.7	1.4	1.1	0.83	36
30	3.1	2.7	2.3	1.9	1.5	1.2	26
20	4.8	4.2	3.6	3	2.4	1.8	17
10	10	8.8	7.5	6.3	5	3.8	8
	20	30	40	50	60	70	T_A

Ambient temp. [°C]

Heatsink Selection

Carlo Gavazzi Heatsink (see Accessories)	**Thermal resistance**
No heatsink required	$R_{th\ s\text{-}a}$ > 12.5 K/W
RHS 100 Assy	3.0 K/W
RHS 301 Assy	0.8 K/W
RHS 301 F Assy	0.25 K/W
Consult your distributor	< 0.25 K/W

Compare the value found in the current versus temperature chart with the standard heatsink values and select the heatsink with the next lower value.

Applications

This relay is designed for use in applications in which it is exposed to high surge conditions. Care must be taken to ensure proper heatsinking when the relay is to be used at high sustained currents. Adequate electrical connection between relay terminals and cable must be ensured.

Thermal characteristics
The thermal design of Solid State Relays is very important. It is essential that the user makes sure that cooling is adequate and that the maximum junction temperature of the relay is not exceeded.

If the heatsink is placed in a small closed room, control panel or the like, the power dissipation can cause the ambient temperature to rise. The heatsink is to be calculated on the basis of the ambient temperature and the increase in temperature.

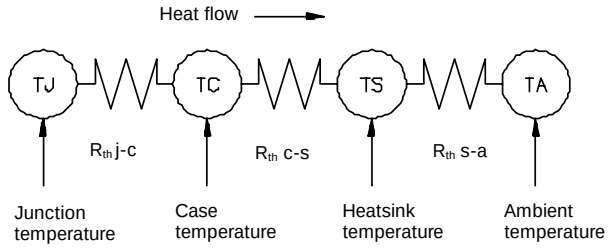

Thermal resistance:
R_{th} j-c = junction to case
R_{th} c-s = case to heatsink
R_{th} s-a = heatsink to ambient

Direct bonding
In the design of the output power semiconductor direct bonding of the copper layer and the ceramic substrate has been applied. This is to ensure uninhibited heat transfer and high thermal fatigue strength.

The relay has been designed for applications requiring large numbers of load cycles.

Power dissipation
The power dissipation for intermittent use is calculated according to the following formula:

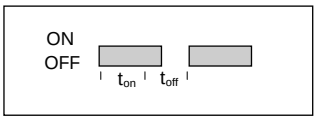

$$I_{rms} = \sqrt{\frac{I_{ON}^2 \times t_{ON}}{t_{ON} + t_{OFF}}}$$

Ex: RA 24 50 -D 06:
Load current = 45 A
t_{ON} = 30 s
t_{OFF} = 15 s

$$I_{rms} = \sqrt{\frac{45^2 \times 30}{30 + 15}}$$

The rms current will be 36.7 A.

Specifications are subject to change without notice (28.02.2007)