SAW Components

SAW resonator

Short range devices

Series/type:	**R 962**
Ordering code:	**B39431R 962H110**
Date:	January 12, 2006
Version:	2.0

© EPCOS AG 2006. Reproduction, publication and dissemination of this data sheet, enclosures hereto and the information contained therein without EPCOS' prior express consent is prohibited.

Data sheet SMD

Application

- 1-port resonator
- Provides reliable, fundamental mode, quartz frequency stabilization i.e. in transmitters or local oscillators



Features

- Package size 3.0 x 3.0 x 1.0 mm^3
- Package code DCC6E
- RoHS compatible
- Approximate weight 0.037 g
- Package for **S**urface **M**ount **T**echnology (**SMT**)
- Ni, gold-plated terminals
- Lead free soldering compatible with J - STD20C
- Passivation layer Elpas
- AEC-Q200 qualified component family
- **E**lectrostactic **S**ensitive **D**evice (**ESD**)

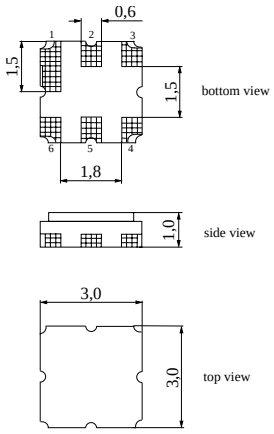

Pin configuration

■	2	Input
■	5	Output, grounded in 1-port conf.
■	1,3,4,6	Ground (case)

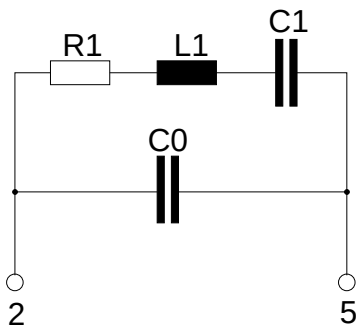

Data sheet SMD

Characteristics

Reference temperature: T_A = 25 ˚C
Terminating source impedance: Z_S = 50 Ω
Terminating load impedance: Z_L = 50 Ω

		min.	typ.	max.	
Center frequency[1]	f_C	433.90	433.95	434.00	MHz
Minimum insertion attenuation	α_{min}	—	1.4	1.8	dB
Unloaded quality factor	Q_U	8300	12200	—	
Ageing of f_C		—	—	–50/+50	ppm
Equivalent circuit elements					
Motional capacitance	C_1	—	1.76	—	fF
Motional inductance	L_1	—	76.32	—	µH
Motional resistance	R_1	—	18	26	Ω
Parallel capacitance[2]	C_0	—	2.4	—	pF
Temperature coefficient of frequency[3]	TC_f	—	–0.032	—	ppm/K²
Turnover temperature	T_0	10	—	30	˚C

1) Center frequency is defined as maximum of the real part of the admittance.
2) If used in two port configuration (pin 1 - input, pin 3 - output) C_0 is reduced by approx. 0.3 pF.
3) Temperature dependence of f_C: $f_C(T_A) = f_C(T_0)\ (1 + TC_f\ (T_A - T_0)^2)$

Maximum ratings

Operable temperature range	T	–40/+125	˚C	
Storage temperature range	T_{stg}	–40/+125	˚C	
DC voltage	V_{DC}	12	V	
Source power	P_S	0	dBm	

References

Type	R 962
Ordering code	B39431R 962H110
Marking and package	C61157-A7-A143
Packaging	F61074-V8168-Z000
Date codes	L_1126
Soldering profile	S_6001
RoHS compatible	defined as compatible with the following documents: "DIRECTIVE 2002/95/EC OF THE EUROPEAN PARLIAMENT AND OF THE COUNCIL of 27 January 2003 on the restriction of the use of certain hazardous substances in electrical and electronic equipment. 2005/618/EC from April 18th, 2005, amending Directive 2002/95/EC of the European Parliament and of the Council for the purposes of establishing the maximum concentration values for certain hazardous substances in electrical and electronic equipment."

For further information please contact your local EPCOS sales office or visit our webpage at www.epcos.com .

Published by EPCOS AG
Surface Acoustic Wave Components Division
P.O. Box 80 17 09, 81617 Munich, GERMANY

© EPCOS AG 2006. This brochure replaces the previous edition.

For questions on technology, prices and delivery please contact the Sales Offices of EPCOS AG or the international Representatives.

Due to technical requirements components may contain dangerous substances. For information on the type in question please also contact one of our Sales Offices.

Important notes

The following applies to all products named in this publication:

1. Some parts of this publication contain **statements about the suitability of our products for certain areas of application**. These statements are based on our knowledge of typical requirements that are often placed on our products in the areas of application concerned. We nevertheless expressly point out **that such statements cannot be regarded as binding statements about the suitability of our products for a particular customer application.** As a rule, EPCOS is either unfamiliar with individual customer applications or less familiar with them than the customers themselves. For these reasons, it is always ultimately incumbent on the customer to check and decide whether an EPCOS product with the properties described in the product specification is suitable for use in a particular customer application.
2. We also point out that **in individual cases, a malfunction of passive electronic components or failure before the end of their usual service life cannot be completely ruled out in the current state of the art, even if they are operated as specified.** In customer applications requiring a very high level of operational safety and especially in customer applications in which the malfunction or failure of a passive electronic component could endanger human life or health (e.g. in accident prevention or life-saving systems), it must therefore be ensured by means of suitable design of the customer application or other action taken by the customer (e.g. installation of protective circuitry or redundancy) that no injury or damage is sustained by third parties in the event of malfunction or failure of a passive electronic component.
3. The warnings, cautions and product-specific notes must be observed.
4. In order to satisfy certain technical requirements, **some of the products described in this publication may contain substances subject to restrictions in certain jurisdictions (e.g. because they are classed as "hazardous")**. Useful information on this will be found in our Material Data Sheets on the Internet (www.epcos.com/material). Should you have any more detailed questions, please contact our sales offices.
5. We constantly strive to improve our products. Consequently, **the products described in this publication may change from time to time**. The same is true of the corresponding product specifications. Please check therefore to what extent product descriptions and specifications contained in this publication are still applicable before or when you place an order.
   We also **reserve the right to discontinue production and delivery of products**. Consequently, we cannot guarantee that all products named in this publication will always be available.
6. Unless otherwise agreed in individual contracts, **all orders are subject to the current version of the "General Terms of Delivery for Products and Services in the Electrical Industry" published by the German Electrical and Electronics Industry Association (ZVEI)**.
7. The trade names EPCOS, CeraDiode, CSSP, PhaseCap, PhaseMod, SIFI, SIKOREL, SilverCap, SIMID, SIOV, SIP5D, SIP5K, TOPcap, UltraCap, WindCap are **trademarks registered or pending** in Europe and in other countries. Further information will be found on the Internet at www.epcos.com/trademarks.