Remote I/O R80 Series

NPN DISCRETE INPUT MODULE, 8 points

(Tension clamp terminal block)

Functions & Features

• 8 channels for discrete input, compact size remote I/O module

• 16 pins tension clamp connector

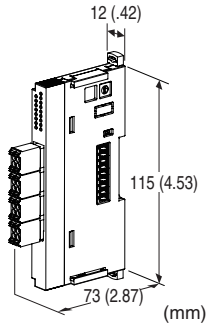

MODEL: R80DAT8A[1]

ORDERING INFORMATION

• Code number: R80DAT8A[1]

Specify a code from below for [1].
(e.g. R80DAT8A/Q)

• Specify the specification for option code /Q
(e.g. /C01)

[1] OPTIONS

blank: none

/Q: With options (specify the specification)

SPECIFICATIONS OF OPTION: Q

COATING (For the detail, refer to M-System's web site.)

/C01: Silicone coating

/C02: Polyurethane coating

RELATED PRODUCTS

• PC configurator software (model: R80CFG)
Downloadable at M-System's web site.
For connecting to PC, use commercially available Mini-B type USB cable. (provided by user)

GENERAL SPECIFICATIONS

Connection

Input: Separable tension clamp terminal

Internal bus, internal power, excitation power supply: Connected to internal bus connector

Isolation: Input or exc. supply to internal bus or internal power

Module address: With rotary switch

Terminating resistor: Built-in (DIP Switch, default: disable)

Status indicator: Bi-color (red/green) LED; Refer to the instruction manual.

Discrete input status indicators: Green LED; Refer to the instruction manual.

INPUT SPECIFICATIONS

Module type: Discrete input, 8 points

Common: Positive common (NPN)

Number of input: 8 points

Maximum inputs applicable at once: No limit (at 24 V DC)

Rated input voltage: 24 V DC ±10 %; ripple 5 %p-p max.

ON voltage / current: ≥ 15 V DC (input – 24 V) / ≥ 2.3 mA

OFF voltage / current: ≤ 5 V DC (input – 24 V) / ≤ 1 mA

Input current: ≤ 4.5 mA per point at 24 V DC

Input resistance: Approx. 5.7 kΩ

ON delay: ≤ 0.2 msec.

OFF delay: ≤ 0.5 msec.

Read rate: 100 µsec., 400 µsec., 800 µsec., 4 msec., 8 msec., 16 msec., 40 msec. (Configurable with PC configurator) (Factory setting: 100 µsec.)

INSTALLATION

Max. current consumption: 100 mA

Operating temperature: -10 to +55°C (14 to 131°F)

Operating humidity: 30 to 90 %RH (non-condensing)

Atmosphere: No corrosive gas or heavy dust

Mounting: DIN rail

Weight: 80 g (2.82 oz)

PERFORMANCE

Power output (input terminal): Rated curent 3 A DC (rated current 3 A for internal fuse (slow blow fuse i^2t (A^2sec) max. 5.04)

Insulation resistance: ≥ 100 MΩ with 500 V DC

Dielectric strength: 1500 V AC @ 1 minute
(input or exc. supply to internal bus or internal power to ground)

EXTERNAL VIEW

■ **FRONT VIEW**

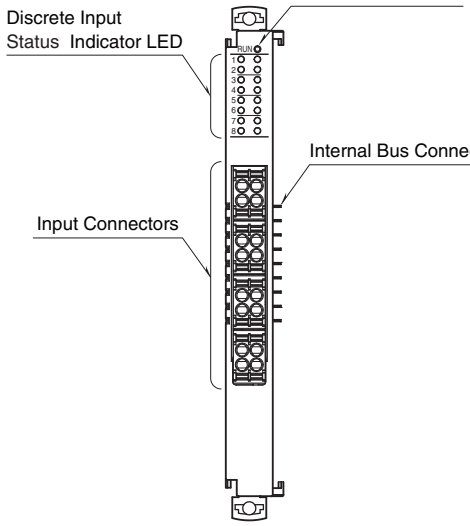

■ **SIDE VIEW**

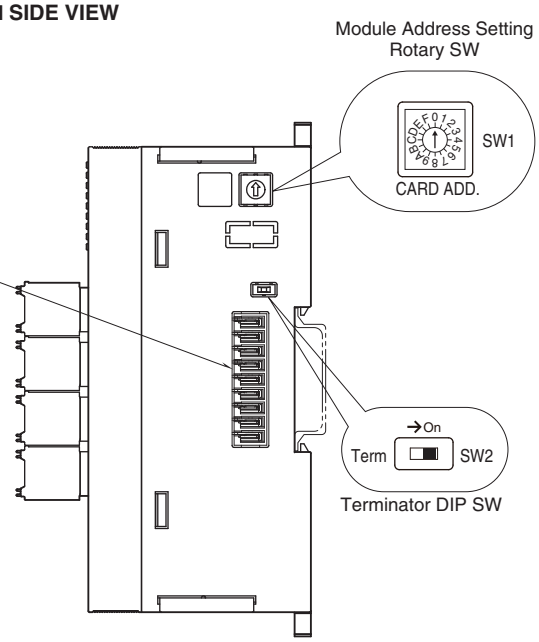

WIRING

• INPUT CONNECTOR

Unit side connector: M-System's product

Cable side connector: DFMC1,5/2-ST-3,5 (Phoenix Contact) (included in the package)

Applicable wire size: 0.2 − 1.5 mm^2; stripped length 10 mm

Recommended solderless terminal

- AI0,25−10YE 0.25 mm^2 (Phoenix Contact)
- AI0,34−10TQ 0.34 mm^2 (Phoenix Contact)
- AI0,5−10WH 0.5 mm^2 (Phoenix Contact)
- AI0,75−10GY 0.75 mm^2 (Phoenix Contact)
- A1−10 1.0 mm^2 (Phoenix Contact)
- A1,5−10 1.5 mm^2 (Phoenix Contact)

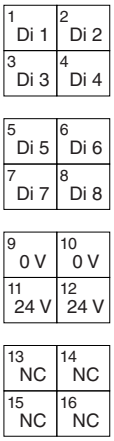

PIN No.	ID	FUNCTION
1	Di 1	INPUT 1
2	Di 2	INPUT 2
3	Di 3	INPUT 3
4	Di 4	INPUT 4
5	Di 5	INPUT 5
6	Di 6	INPUT 6
7	Di 7	INPUT 7
8	Di 8	INPUT 8
9	0 V	Excitation supply 0 V DC
10	0 V	Excitation supply 0 V DC
11	24 V	Excitation supply 24 V DC
12	24 V	Excitation supply 24 V DC
13	NC	No connection
14	NC	No connection
15	NC	No connection
16	NC	No connection

OPERATING MODE SETTING

• Module address setting

Module address: Selectable between 0 and F, with rotary switch

(Factory setting: 0)

• Terminator DIP SW

TERMINATOR SW	SW2
Without (*)	OFF
With	ON

(*) Factory setting

EXTERNAL DIMENSIONS unit: mm (inch)

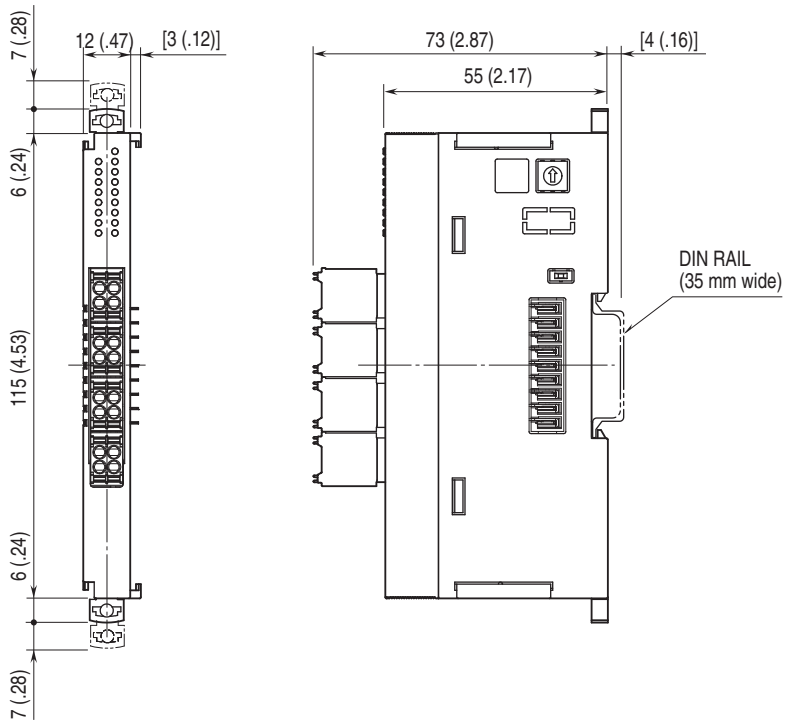

SCHEMATIC CIRCUITRY & CONNECTION DIAGRAM

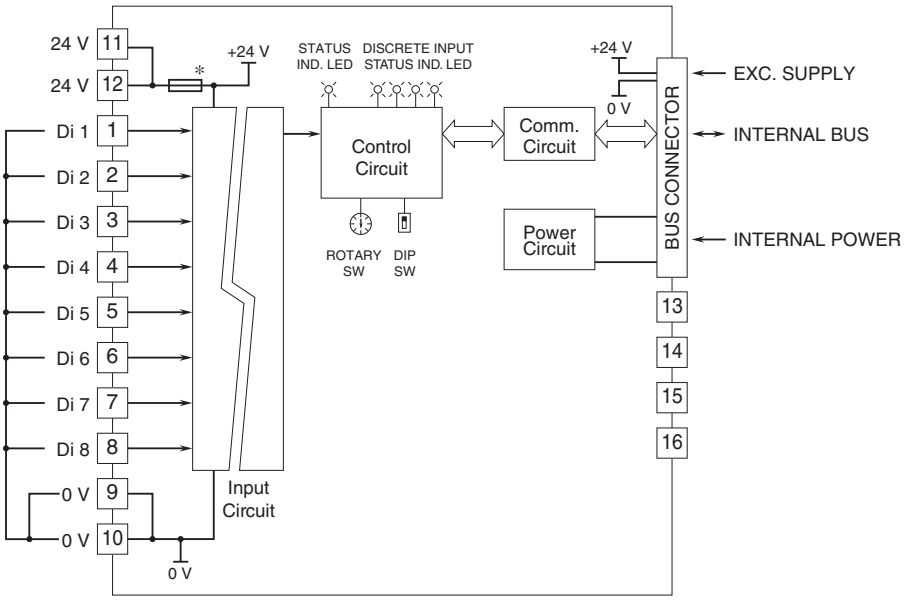

* The fuse is not replaceable.

■ **INPUT CIRCUIT**

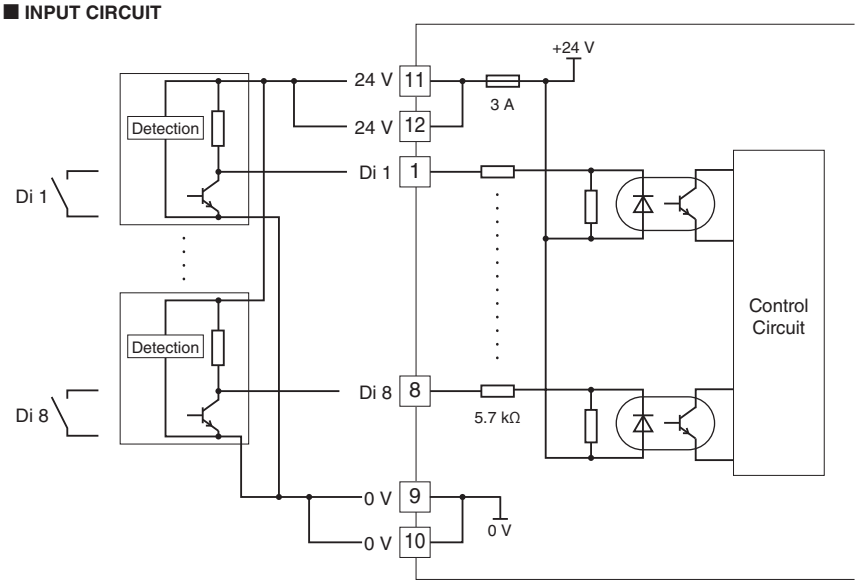

⚠ Specifications are subject to change without notice.