Remote I/O R8 Series

PNP TRANSISTOR OUTPUT MODULE, 32 points

(with shortcircuit protection)

Functions & Features

• 32 channels for discrete output, compact size remote I/O module

• 40 pin MIL connector

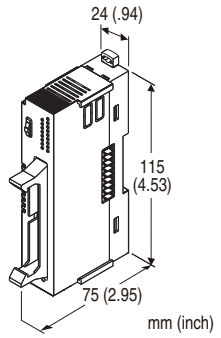

CE

MODEL: R8-DCM32B2[1]

ORDERING INFORMATION

• Code number: R8-DCM32B2[1]

Specify a code from below for [1].

(e.g. R8-DCM32B2/Q)

• Specify the specification for option code /Q

(e.g. /C01)

[1] OPTIONS

blank: none

/Q: With options (specify the specification)

SPECIFICATIONS OF OPTION: Q

COATING (For the detail, refer to M-System's web site.)

/C01: Silicone coating

/C02: Polyurethane coating

RELATED PRODUCTS

• PC configurator software (model: R8CFG)

A dedicated cable is required to connect the module to the PC. Please refer to the users manual for the PC configurator for applicable cable types.

Note: When using with Power/Network module (model: R8-NECT1), firmware version Ver1.30 or later is supported.

GENERAL SPECIFICATIONS

Connection

•**Output**:40-pin MIL connector

PWB connector XG4A-4034 (Omron)

Recommended socket XG5N-401 (Omron)

Recommended contact XG5W-0231 (Omron)

Applicable wire size AWG22, number of conductor 17, diameter of conductor 0.16 mm (The socket and contact are not included in the package. Refer to the specifications of the product.)

•**Excitation supply, internal bus**:

Connected to internal bus connector

•**Internal power**: Supplied from internal bus connector

Isolation: Output or exc. supply to internal bus or internal power

Module address: With DIP switch

Output at the loss of communication: Selectable with the side DIP SW

Terminating resistor: Built-in (DIP Switch, default: disable)

Configuration mode: With DIP switches on the side panel

Status indicator: Bi-color (red/green) LED; Refer to the instruction manual.

Discrete output status indicators: Green LED; Switch between output 1 to 16 and 17 to 32. Refer to the instruction manual.

OUTPUT SPECIFICATIONS

Common: Positive common (PNP) per 32 points

Maximum outputs applicable at once: No limit (at 24 V DC)

Number of output: 32 points

Rated load voltage: 24 V DC ±10 %

Rated output current: 50 mA per point, 1.6 A per common

Residual voltage: ≤ 0.5 V

Leakage current: ≤ 0.1 mA

ON delay: ≤ 0.5 msec.

OFF delay: ≤ 1.5 msec.

With shortcircuit protection

With overheat protection

(When driving an inductive load, connect a diode in parallel with the load.)

INSTALLATION

Max. current consumption: 110 mA

Operating temperature: -10 to +55°C (14 to 131°F)

Operating humidity: 30 to 90 %RH (non-condensing)

Atmosphere: No corrosive gas or heavy dust

Mounting: DIN rail

Weight: 110 g (0.24 lb)

PERFORMANCE

Data allocation: 1

Module addresses in use: 2

Insulation resistance: ≥ 100 MΩ with 500 V DC

Dielectric strength: 1500V AC @1 minute

(output or exc. supply to internal bus or internal power to ground)

STANDARDS & APPROVALS

EU conformity:
EMC Directive
EMI EN 61000-6-4
EMS EN 61000-6-2
RoHS Directive
EN 50581

EXTERNAL VIEW

■ FRONT VIEW

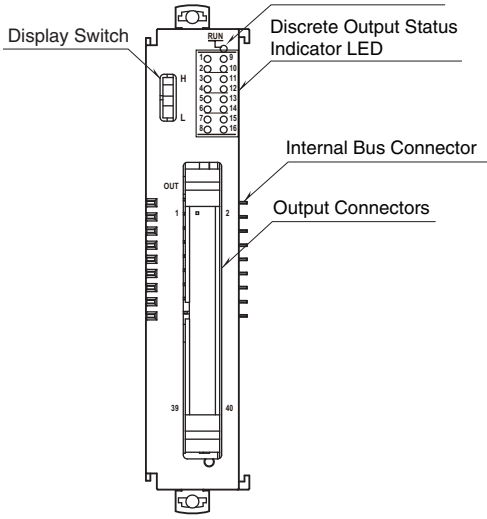

■ SIDE VIEW

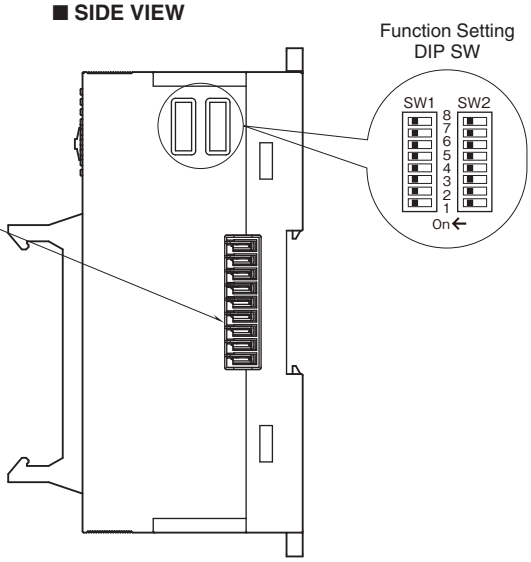

OPERATING MODE SETTING

(*) Factory setting
Caution ! - SW2-1, 2-2, 2-3, 2-4, 2-7 are unused. Be sure to turn off unused ones.

■ Module Address

The SW1-1, SW1-2, SW1-3, SW1-4 determines the tenth place digit, while the SW1-5, SW1-6, SW1-7, SW1-8 does the ones place digit of the address.
Address is selected between 0 to 30.
(Factory setting: 0)

MODULE ADDRESS	SW1				
	×10	1	2	3	4
	×1	5	6	7	8
0		OFF	OFF	OFF	OFF
1		OFF	OFF	OFF	ON
2		OFF	OFF	ON	OFF
3		OFF	OFF	ON	ON
4		OFF	ON	OFF	OFF
5		OFF	ON	OFF	ON
6		OFF	ON	ON	OFF
7		OFF	ON	ON	ON
8		ON	OFF	OFF	OFF
9		ON	OFF	OFF	ON

■ Output at The Loss of Communication

OUTPUT AT THE LOSS OF COMMUNICATION	SW2
	5
Output Hold (*) (last data correctly rerceived is hold)	OFF
Stop output (Output fixed at OFF)	ON

■ Terminator DIP SW

TERMINATOR SW	SW2
	6
Without (*)	OFF
With	ON

■ Configuration Mode

CONFIGURATION MODE	SW2
	8
DIP switch setting (*)	OFF
PC Configurator and communication	ON

DIMENSIONS unit: mm (inch)

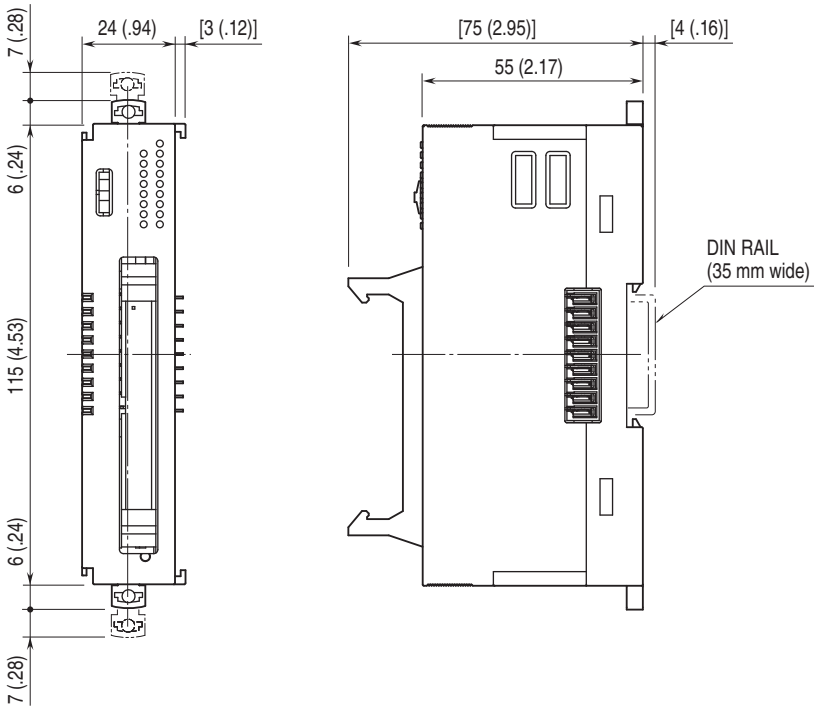

SCHEMATIC CIRCUITRY & CONNECTION DIAGRAM

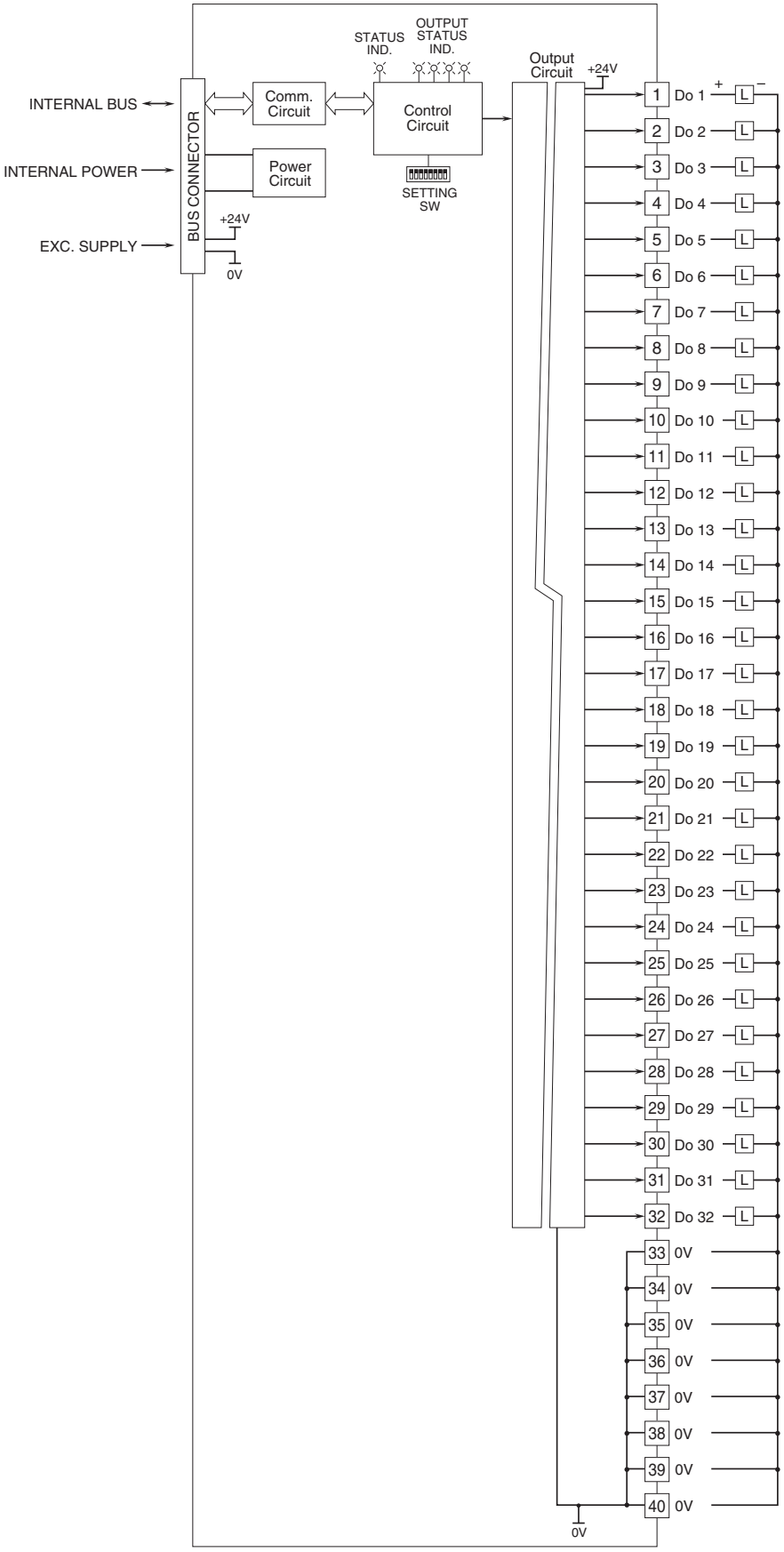

■ **OUTPUT CIRCUIT**

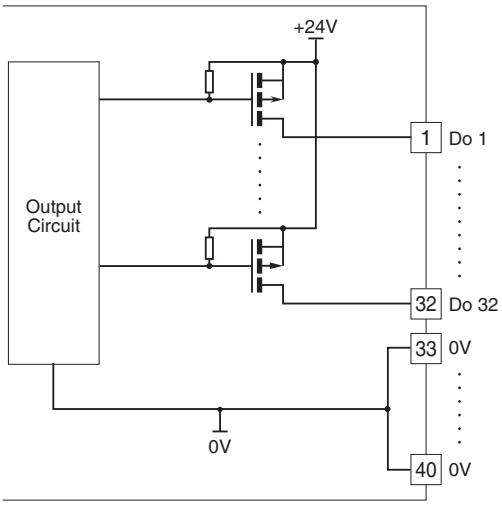

⚠ Specifications are subject to change without notice.