Remote I/O R8 Series

NPN TRANSISTOR OUTPUT MODULE

(Voltage contact, with shortcircuit protection, 4 points)

Functions & Features

• 4-channel discrete output, compact size remote I/O module

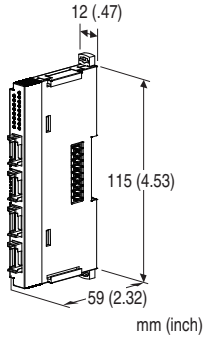

MODEL: R8-DC4A2[1]

ORDERING INFORMATION

• Code number: R8-DC4A2[1]

Specify a code from below for [1].
(e.g. R8-DC4A2/Q)

• Specify the specification for option code /Q
(e.g. /C01)

[1] OPTIONS

blank: none

/Q: With options (specify the specification)

SPECIFICATIONS OF OPTION: Q

COATING (For the detail, refer to M-System's web site.)

/C01: Silicone coating

/C02: Polyurethane coating

RELATED PRODUCTS

• PC configurator software (model: R8CFG)

Downloadable at M-System's web site.

A dedicated cable is required to connect the module to the PC. Please refer to the internet software download site or the users manual for the PC configurator for applicable cable types.

GENERAL SPECIFICATIONS

Connection

•**Input**: 4-pin e-CON connector
Unit side connector XN2D-1474-S002 (Omron)
Recommended cable side connector XN2A-1470 (Omron)
Applicable wire size 0.08 - 0.5 mm^2 (AWG28 - 20)
Outer sheath diameter: max. 1.5 dia
(The cable side connector is not included in the package. Refer to the specifications of the product.)

•**Excitation supply, internal bus**:
Connected to internal bus connector

•**Internal power**: Supplied from internal bus connector

Isolation: Output or exc. supply to internal bus or internal power

Module address: With rotary switch

Output at the loss of communication: Selectable with the side DIP SW

Terminating resistor: Built-in (DIP Switch, default: disable)

Configuration mode: With DIP switches on the side panel

Status indicator: Bi-color (red/green) LED; Refer to the instruction manual.

Discrete output status indicators: Green LED; Refer to the instruction manual.

OUTPUT SPECIFICATIONS

Common: Negative common (NPN) per 4 points

Number of outputs: 4

Maximum outputs applicable at once: No limit (at 24 V DC)

Rated load voltage: 24 V DC ±10 %

Rated output current: 0.2 A per point

Residual voltage: ≤ 0.5 V

Leakage current: ≤ 0.1 mA

ON delay: ≤ 0.5 msec.

OFF delay: ≤ 1.5 msec.

Shortcircuit protection: Included

Overheat Protection Function: Included

(When driving an inductive load, connect a diode in parallel with the load.)

INSTALLATION

Max. current consumption: 100 mA

Operating temperature: -10 to +55°C (14 to 131°F)

Operating humidity: 30 to 90 %RH (non-condensing)

Atmosphere: No corrosive gas or heavy dust

Mounting: DIN rail

Weight: 60 g (2.12 oz)

PERFORMANCE

Data allocation: 1

Module addresses in use: 1

Insulation resistance: ≥ 100 MΩ with 500 V DC

Dielectric strength: 1500V AC @1 minute
(output or exc. supply to internal bus or internal power to ground)

STANDARDS & APPROVALS

EU conformity:
EMC Directive
EMI EN 61000-6-4
EMS EN 61000-6-2
RoHS Directive
EN 50581

EXTERNAL VIEW

■FRONT VIEW

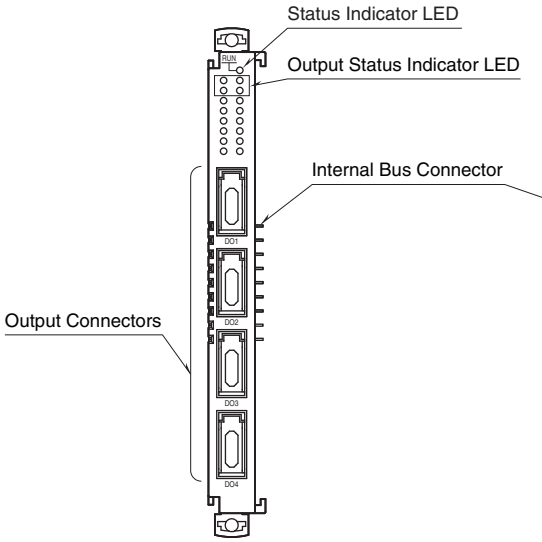

■SIDE VIEW

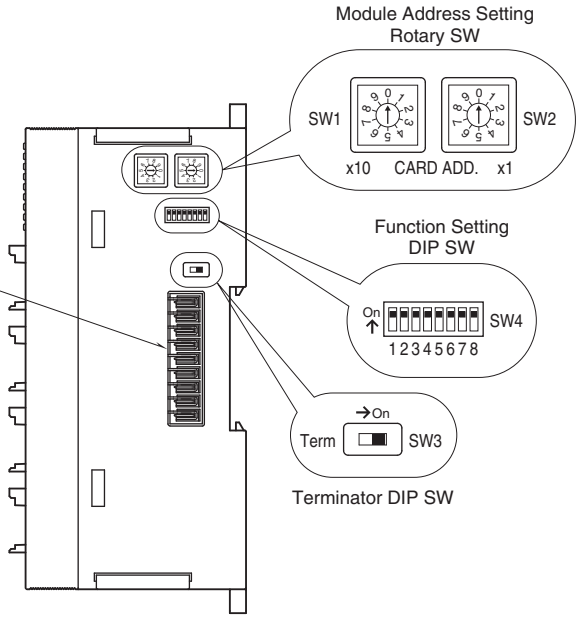

OPERATING MODE SETTING

(*) Factory setting
Caution ! - SW4-1 through 4-6 are unused. Be sure to turn off unused ones.

■ Module Address

The left switch determines the tenth place digit, while the right switch does the ones place digit of the address.
Address is selected between 0 to 31.
(Factory setting: 0)

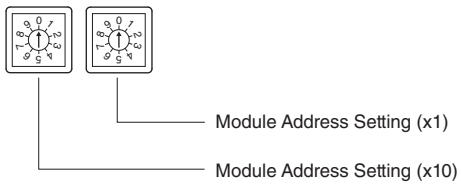

■ Output at the Loss of Communication

OUTPUT AT THE LOSS OF COMMUNICATION	SW4
	7
Output Hold (*) (last data correctly received is hold)	OFF
Stop output (Output fixed at OFF)	ON

■ Configuration Mode

CONFIGURATION MODE	SW4
	8
DIP switch setting (*)	OFF
PC Configurator and communication	ON

■ Terminator DIP SW

TERMINATOR SW	SW3
Without (*)	OFF
With	ON

DIMENSIONS unit: mm (inch)

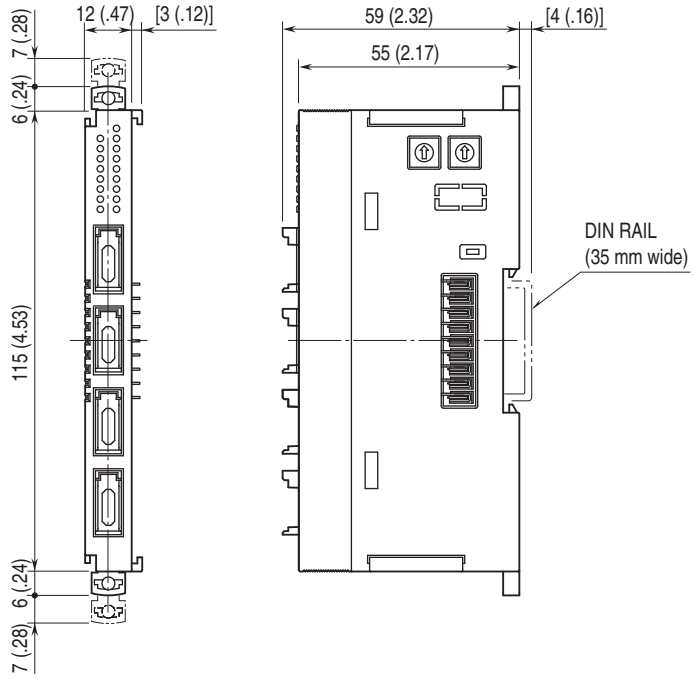

SCHEMATIC CIRCUITRY & CONNECTION DIAGRAM

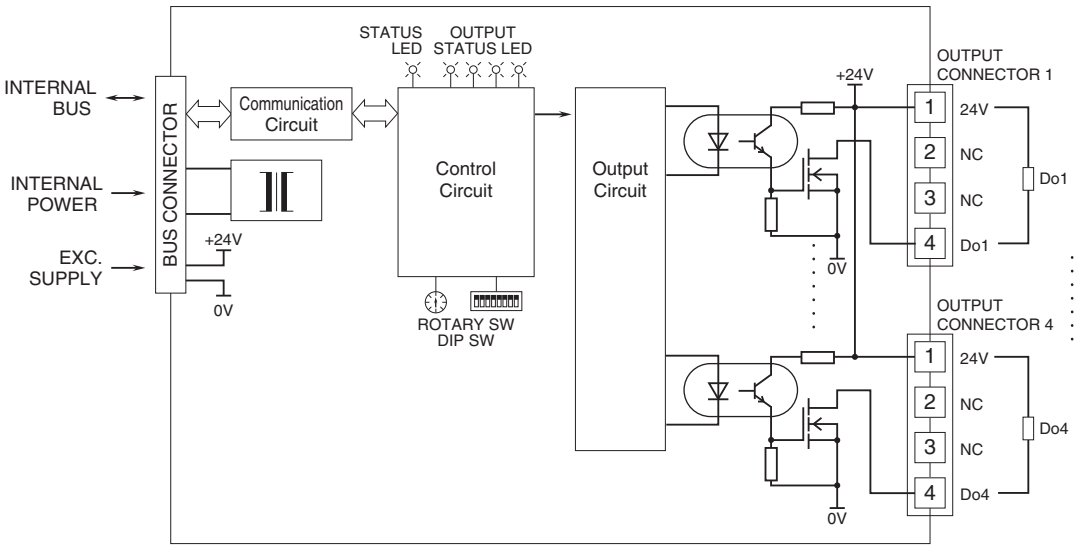

⚠ Specifications are subject to change without notice.