Remote I/O R7 Series

MODBUS I/O MODULE

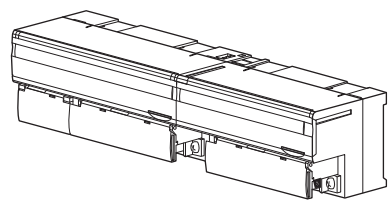

ORDERING INFORMATION

• Basic module: R7M-[1]-[2][3]
Specify a code from below for each of [1] through [3].
(e.g. R7M-DC16A-R/UL)
• Specify the specification for option code /Q
(e.g. /C01/SET)

• Extension module: R7M-[1][2]
Specify a code from below for each of [1] and [2].
(e.g. R7M-EC16A/UL)
• Specify the specification for option code /Q
(e.g. /C01)

BASIC MODULE: R7M–[1]–[2][3]

[1] I/O TYPE

DA16: Discrete input, 16 points
DA16F: Discrete input, 16 points
(115.2 kbps, Option /UL Not selectable)
(Terminating resistor incorporated)
DC16A: NPN transistor output, 16 points
DC16B: PNP transistor output, 16 points
DAC16C: NPN discrete input &
NPN transistor output, 8 points each
(115.2 kbps, option /UL Not selectable)
(Terminating resistor incorporated)
DAC16D: PNP discrete input &
PNP transistor output, 8 points each
(115.2 kbps, option /UL Not selectable)
(Terminating resistor incorporated)
DC8C: Relay contact output, 8 points
(Option /UL Not selectable)
(Not usable with 'extension' modules)
RR8: Remote control relay control, 8 points
(115.2 kbps, CE not available, option /UL Not selectable)
(Terminating resistor incorporated)
SV4: DC voltage/current input (10 V / 20 mA), 4 points
TS4: Thermocouple input, 4 points
RS4: RTD input, 4 points
MS4: Potentiometer input, 4 points (Option /UL Not selectable)
CT4E: AC current input, 4 points,
Clamp-on current sensor CLSE use
(Option /UL Not selectable)
PA8: Totalized pulse input, 8 points,
(115.2 kbps, CE not available, option /UL Not selectable)
(Terminating resistor incorporated)
YV2: DC voltage output, 2 points
YS2: DC current output, 2 points

[2] POWER INPUT

DC power
R: 24 V DC
(Operational voltage range: ±10 %; ripple 10 %p-p max.)
Universal
AR: 24 V AC/DC (Only for R7M-PA8 and RR8)
(Operational voltage range: ±10 %; ripple 10 %p-p max.)

[3] OPTIONS

Standards & Approvals
blank: CE marking (Refer I/O TYPE code for exception)
/UL: UL approval, CE marking
Other Options
blank: none
/Q: Option other than the above (specify the specification)
(UL not available)

SPECIFICATIONS OF OPTION: Q (multiple selections)

COATING (For the detail, refer to M-System's web site.)
/C01: Silicone coating
/C02: Polyurethane coating
/C03: Rubber coating
EX-FACTORY SETTING
/SET: Preset according to the Ordering Information Sheet
(No. ESU-7803-x)

EXTENSION MODULE: R7M–[1][2]

[1] I/O TYPE

EA8: Discrete input, 8 points
EA16: Discrete input, 16 points
EC8A: NPN transistor output, 8 points
EC16A: NPN transistor output, 16 points
EC8B: PNP transistor output, 8 points
EC16B: PNP transistor output, 16 points
EC8C: Relay contact output, 8 points
(CE not available. Option /UL Not selectable)

[2] OPTIONS

STANDARDS & APPROVALS

blank: CE marking (Refer I/O TYPE code for exception)
/UL: UL approval, CE marking
blank: none
/Q: Option other than the above (specify the specification) (UL not available)

SPECIFICATIONS OF OPTION: Q

COATING (For the detail, refer to M-System's web site.)

/C01: Silicone coating
/C02: Polyurethane coating
/C03: Rubber coating

FUNCTIONS & FEATURES

The R7M interfaces analog and discrete I/O signals with a PC via Modbus.
A 'basic' module can be attached with an 'extension' module.
(R7M-DC8C can not be attached with an 'extension' module.)
By combining two modules, single station can handle mixed analog and discrete signals, 32-point discrete inputs, 32-point discrete outputs, 16-point discrete I/Os and other combinations of signals.
Input sensor type (thermocouple, RTD) and range can be selected with the front DIP switches for all channels.
In order to set different selections for individual channels, zero/span adjustments, scaling and temperature unit, use the PC Configurator Software (model: R7CON)

RELATED PRODUCTS

• PC configurator software (model: R7CON)
Downloadable at M-System's web site.
A dedicated cable is required to connect the module to the PC. Please refer to the internet software download site or the users manual for the PC configurator for applicable cable types.
• Clamp-on current sensor (model: CLSE)
For R7M-CT4E, the clamp-on current sensors must be ordered separately. Required number depends upon the channel number.

PACKAGE INCLUDES...

• Terminating resistor (110 Ω, 0.25 W)
(Not provided for models terminating resistor incorporated)

GENERAL SPECIFICATIONS

• Common Specifications
Power input:
24 V AC ±10 % (50 / 60 Hz)
24 V DC ±10 %; ripple 10 %p-p max.
Insulation resistance: ≥ 100 MΩ with 500 V DC
Dielectric strength: 1500 V AC @1 minute
(between isolated circuits)
Operating temperature: -10 to +55°C (14 to 131°F)
Operating humidity: 30 to 90 %RH (non-condensing)
Atmosphere: No corrosive gas or heavy dust
Storage temperature: -20 to +65°C (-4 to +149°F)
Mounting: DIN rail (35 mm wide)
Connection: M3 separable screw terminals
(torque 0.5 N·m)
Screw terminal material: Nickel-plated steel
Solderless terminal: Refer to the drawing at the end of the section.
Recommended manufacturer: Japan Solderless Terminal MFG.Co.Ltd, Nichifu Co.,ltd
Applicable wire size: 0.25 to 1.65 mm^2 (AWG22 to 16)
Housing material: Flame-resistant resin (gray)
Status indicator LEDs: PWR, RUN, ERR, SD, RD
(Refer to the instruction manual for details)

■ DC Power Current Consumption & Weight

R7M-DA16: Approx. 60 mA; 200 g (7.1 oz)
R7M-DA16F: Approx. 40 mA; 200 g (7.1 oz)
R7M-DC16A: Approx. 70 mA; 200 g (7.1 oz)
R7M-DC16B: Approx. 70 mA; 200 g (7.1 oz)
R7M-DAC16C: Approx. 40 mA; 200 g (7.1 oz)
R7M-DAC16D: Approx. 40 mA; 200 g (7.1 oz)
R7M-DC8C: Approx. 60 mA (60 mA); 200 g (7.1 oz)
R7M-RR8: Approx. 60 mA; 200 g (7.1 oz)
R7M-SV4: Approx. 90 mA; 200 g (7.1 oz)
R7M-TS4: Approx. 90 mA; 200 g (7.1 oz)
R7M-RS4: Approx. 90 mA; 200 g (7.1 oz)
R7M-MS4: Approx. 80 mA; 200 g (7.1 oz)
R7M-CT4E: Approx. 100 mA; 200 g (7.1 oz)
R7M-PA8: Approx. 40 mA; 200 g (7.1 oz)
R7M-YV2: Approx. 100 mA; 180 g (6.3 oz)
R7M-YS2: Approx. 140 mA; 180 g (6.3 oz)
R7M-EA8: Approx. 10 mA; 90 g (3.2 oz)
R7M-EA16: Approx. 20 mA; 150 g (5.3 oz)
R7M-EC8A: Approx. 10 mA; 90 g (3.2 oz)
R7M-EC16A: Approx. 20 mA; 150 g (5.3 oz)
R7M-EC8B: Approx. 10 mA; 90 g (3.2 oz)
R7M-EC16B: Approx. 20 mA; 150 g (5.3 oz)
R7M-EC8C: Approx. 40 mA (60mA); 150 g (5.3 oz)
The consumed current of supply power for the output is shown in ().

■ AC Power Current Consumption (UL 61010-1, CAN/CSA-C22.2 No.61010-1)

R7M-RR8: Approx. 140 mA

R7M-PA8: Approx. 75 mA

■ **Recommended solderless terminal**

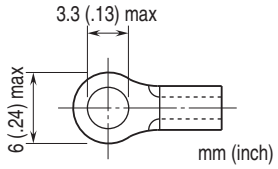

MODBUS COMMUNICATION

Standard: Conforms to TIA/EIA-485-A

Transmission distance: 500 meters max.

Transmission media: Shielded twisted-pair cable (CPEV-S 0.9 dia.)

■ **MODBUS COMMUNICATION PARAMETERS**

PARAMETER	SELECTIONS	SETTING
Data Mode	RTU (*) / ASCII	R7CON
Baud Rate	38.4 kbps (*) / 19.2 kbps / 9600 bps / 4800 bps	Rotary SW
Baud Rate (R7M-PA8, DA16F, DAC16C, DAC16D, RR8)	115.2 kbps / 57.6 kbps 38.4 kbps(*) / 28.8 kbps 19.2 kbps / 14.4 kbps 9600 bps / 4800 bps 2400 bps / 1200 bps	Rotary SW
Parity	NONE (*) / ODD / EVEN	R7CON
Bit Length	8: RTU (*) / 7: ASCII	R7CON
Stop Bit	2 (*) / 1	R7CON
Node Address	1 to 99 (*00)	Rotary SW

(*) Factory setting

STANDARDS & APPROVALS

Refer to the manuals to comply with the standards.

EU conformity:

EMC Directive

EMI EN 61000-6-4

EMS EN 61000-6-2

Low Voltage Directive

(R7M-DC8C only. Refer to the instruction manual for the detail.)

EN 61010-1, EN 61010-2-201

Measurement Category II (output)

Pollution Degree 2

Output to power: Basic insulation (150 V)

RoHS Directive

EN 50581

Approval:

UL/C-UL nonincendive Class I, Division 2, Groups A, B, C, and D (ANSI/ISA-12.12.01, CAN/CSA-C22.2 No.213)

UL/C-UL general safety requirements

EXTERNAL VIEW

■ BASIC MODULE

• SIDE VIEW

• FRONT VIEW

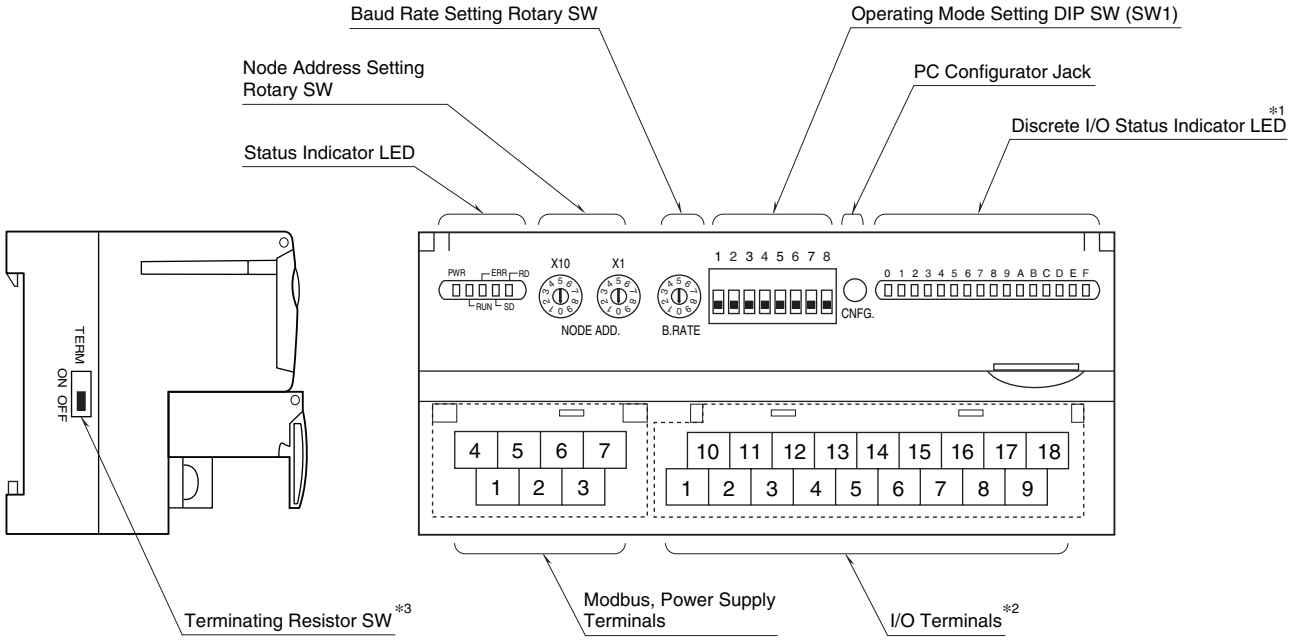

*1. Not available with analog I/O modules.
*2. 10 screw terminals for analog output modules.
*3. Only for R7M-PA8, DA16F, DAC16x and RR8.

■ EXTENSION MODULE

• DISCRETE, 8 POINTS

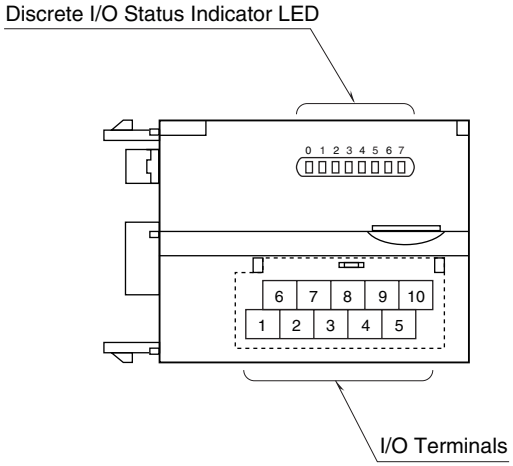

• **DISCRETE, 16 POINTS**

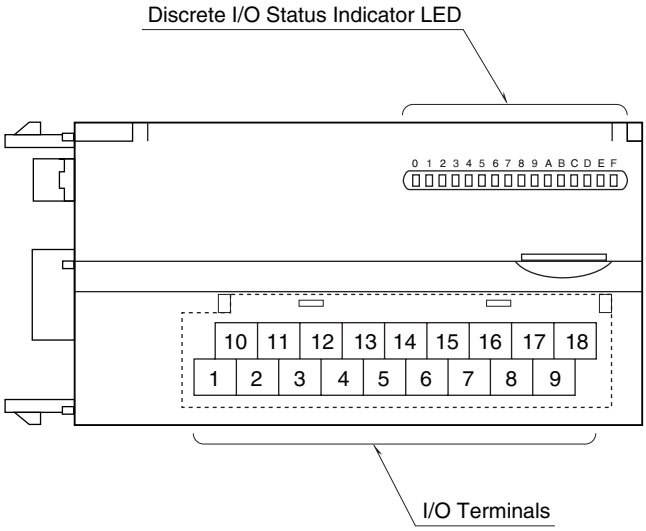

■ DISCRETE I/O STATUS INDICATOR LED

Discrete I/O modules, including those for extensions, have LED indicators showing I/O signal status.
Totalized pulse modules have LED indicators showing input signal status.
Contact ON : LED ON
Contact OFF : LED OF

CONNECTION DIAGRAMS

■ POWER SUPPLY, MODBUS TERMINAL ASSIGNMENT

• **Except R7M-PA8 and RR8**

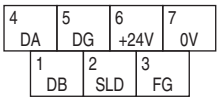

NO.	ID	FUNCTION, NOTES
1	DB	----
2	SLD	Shield
3	FG	FG
4	DA	----
5	DG	----
6	+24V	Power input (24V DC)
7	0V	Power input (0V)

• **R7M-PA8, RR8**

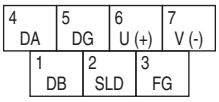

NO.	ID	FUNCTION, NOTES
1	DB	----
2	SLD	Shield
3	FG	FG
4	DA	----
5	DG	----
6	U (+)	Power input
7	V (-)	Power input

■ MASTER CONNECTION

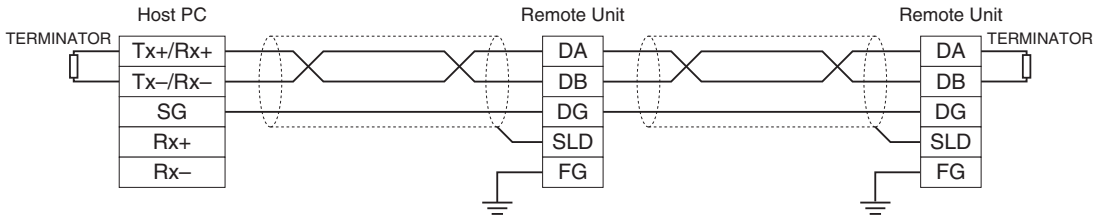

Be sure to connect the terminating resistor included in the product package to the unit at both ends of transmission line.
The terminator must be connected across DA and DB.
The Host PC can be located other than at the extreme ends of transmission line.

MODBUS FUNCTION CODES & SUPPORTED CODES

■ Data and Control Functions

CODE	NAME	
01	Read Coil Status	Digital output from the slave (read/write)
02	Read Input Status	Status of digital inputs to the slave (read only)
03	Read Holding Registers	General purpose register within the slave (read/write)
04	Read Input Registers	Collected data from the field by the slave (read only)
05	Force Single Coil	Digital output from the slave (read/write)
06	Preset Single Register	General purpose register within the slave (read/write)
08	Diagnostics	
11	Fetch Comm. Event Counter	Fetch a status word and an event counter
12	Fetch Comm. Event Log	A status word, an event counter, a message count and a field of event bytes
15	Force Multiple Coils	Digital output from the slave (read/write)
16	Preset Multiple Registers	General purpose register within the slave (read/write)
17	Report Slave ID	Slave type/ 'RUN'status

■ Exception Codes

CODE	NAME	
01	Illegal Function	Function code is not allowable for the slave
02	Illegal Data Address	Address is not available within the slave
03	Illegal Data Value	Data is not valid for the function

■ Diagnostic Subfunctions

CODE	NAME	
00	Return Query Data	Loop back test

MODBUS I/O ASSIGNMENT

	ADDRESS	DATA TYPE	DATA
Coil (0X)	1 – 16		Digital Output (discrete output of the basic module)
	17 – 32		Digital Output (discrete output of the extension module)
Inputs (1X)	1 – 16		Digital Input (discrete input of the basic module)
	17 – 32		Digital Input (discrete input of the extension module)
	33 – 48		Reserved (unused)
	49 – 64		Module Status
	65 – 80		Reserved (unused)
Input Registers (3X)	1 – 4	I	Analog Input
	5 – 16	----	Reserved (unused)
	17 – 24	F	Analog Input
	25 – 48	----	Reserved (unused)
Holding Registers (4X)	1 – 2	I	Analog Output
	3 – 16	----	Reserved (unused)
	17 – 20	F	Analog Output
	21 – 48	----	Reserved (unused)

I : Integer, -1500 – +11500 (-15 – +115%)
F : Floating

Note: DO NOT access addresses other than mentioned above. Such access may cause problems such as inadequate operation.

■ **STATUS**

Analog input modules (models: R7M-SV4, R7M-TS4, R7M-RS4, R7M-MS4, R7M-CT4E) can show input status of each channel.
Analog output modules (models: R7M-YS2, R7M-YV2),
discrete I/O modules (models: R7M-DA16x, R7M-DCx, R7M-DAC16x, R7M-RR8),
totalized pulse input module (model: R7M-PA8) shows '0' at the same address.

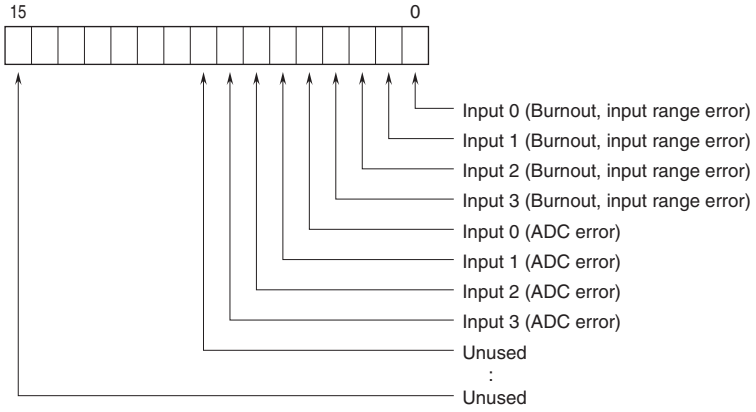

Burnout, input range error (≤-15%, ≥+115%)
0 : Normal 1 : Error
ADC error (no response from ADC)
0 : Normal 1 : Error

DATA CONVERSION

■ **0 – 100% DATA CONVERSION**

Analog input data is converted into digital representations of 0 – 100% proportional to each scaled range. The converted % values are multiplied by 100 and expressed in 16 bits.
Overrange input is possible from -15 to +115% of the nominal range. When the signal exceeds the limit, the data is fixed at -15% or +115% respectively. Negative value is represented in 2's complements.

• Input Range 0 – 5 V DC

Input Value	Input %	Converted Data, Decimal	Converted Data, Hex
≤ -0.75 V	-15%	-1500	FA24
0 V	0%	0	0
5 V	100%	10000	2710
≥ 5.75 V	115%	11500	2CEC

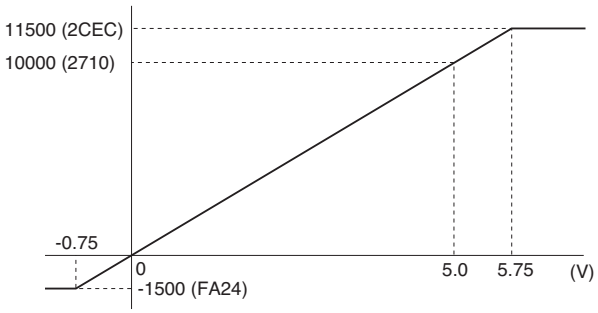

Analog output is converted in the reverse order of the input data. The output range 0 – 5 V DC is expressed as 10000 at 5.0 V (100%) and 0 at 0 V (0%).

■ **ENGINEERING UNIT CONVERSION**

Engineering unit value °C or K is multiplied by 10 and expressed in 16 bits. °F data is represented in engineering unit value, without multiplication. Engineering unit value A is multiplied by 100 or 1000, expressed in 16 bits. Negative value is represented in 2's complements.

• Input TYPE K Thermocouple

Input Value	Converted Data, Decimal	Converted Data, Hex
≤ -272°C	-2720	F560
-150°C	-1500	FA24
1370°C	13700	3584
≥ 1472°C	14720	3980

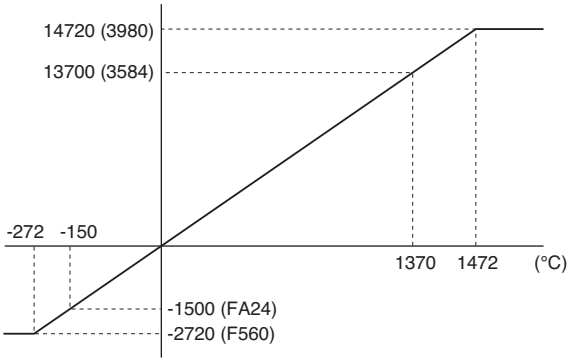

■ **COUNT VALUE**

The count value is 32-bit data. It is divided in 2 words of 16 bits represented with 2 addresses.The lower address is allocated in the upper word (MSB) and the upper address in the lower word (LSB). The count value is 0 - 4 294 967 295. The maximum count value available is 1 000 - 4 294 967 295. In case of overflow, the vaule is reset to 0 or 1 (configurable) from which the count will restart. The preset of the count value is also available. Use the R7CON or commands for the configuration.

EXTENSION MODULE

A 'basic' module can be attached with one 'extension' module. The extension module is powered from the basic module. By combining two modules, single station can handle mixed analog and discrete signals, 32-point discrete inputs, 32-point discrete outputs, 16-point discrete I/Os and other combinations of signals.

Note: Relay contact 8 points output module can not be attached with an 'Extension' module.

■ OUTPUT AT THE LOSS OF COMMUNICATION

The extension module is set to 'Hold Output' by factory default setting. The PC Configurator software is used to change the setting to 'Reset Output.'

■ **CONNECTING THE EXTENSION MODULE**

1) Remove the extension connector cover located at the side of the basic module.
2) Connect the extension module.

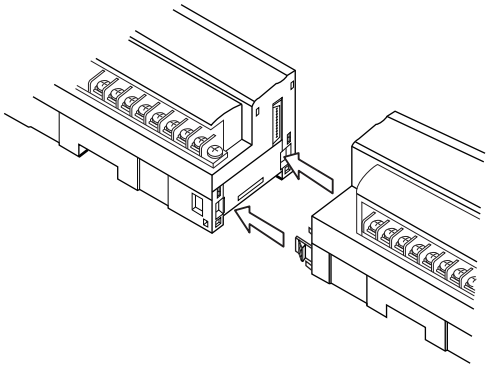

3) Mount the combined module on a DIN rail.

EXTERNAL DIMENSIONS unit: mm (inch)

■ BASIC MODULE

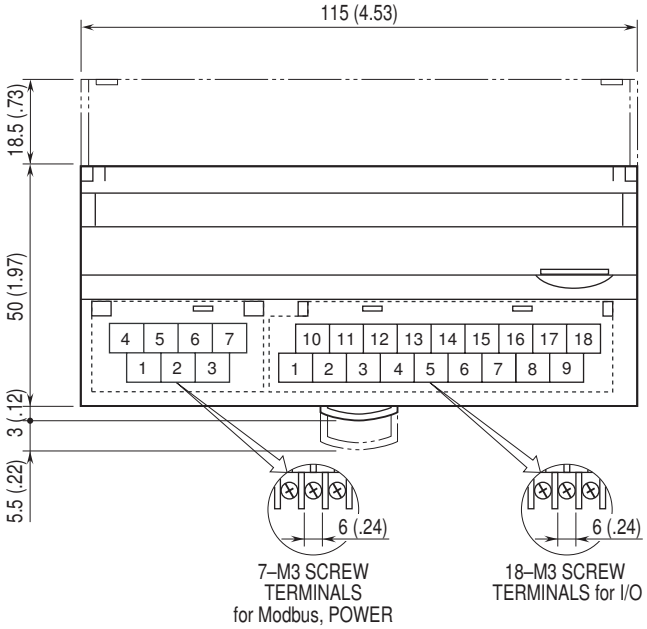

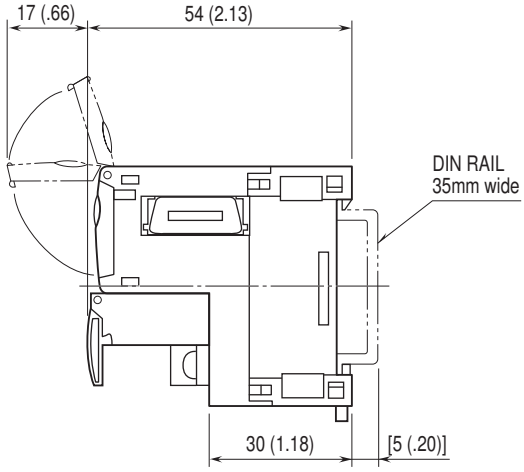

• **R7M-TS4**

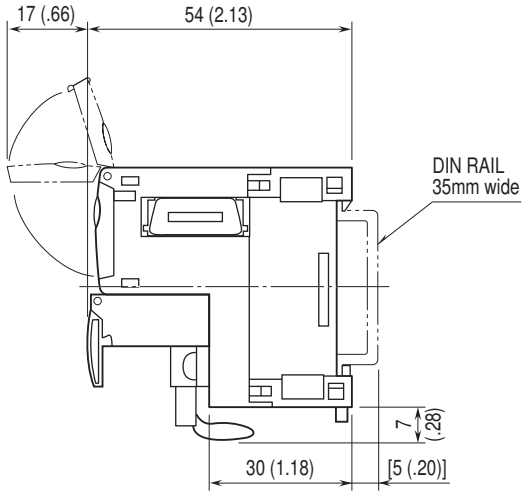

■ ANALOG OUTPUT

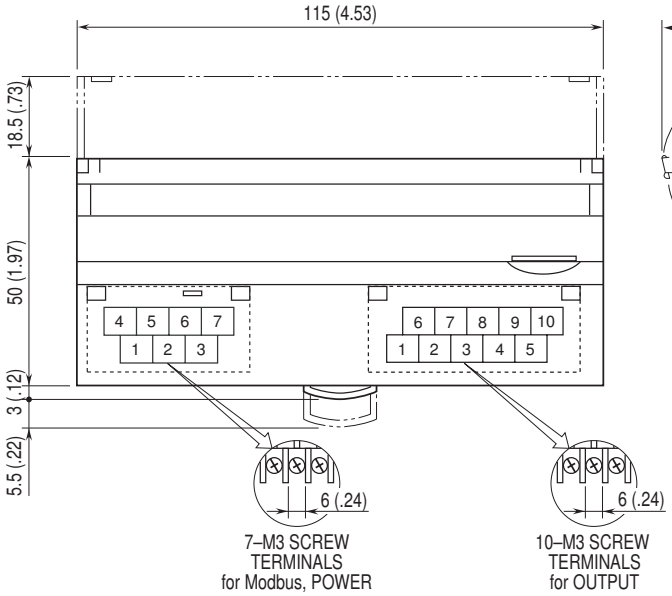

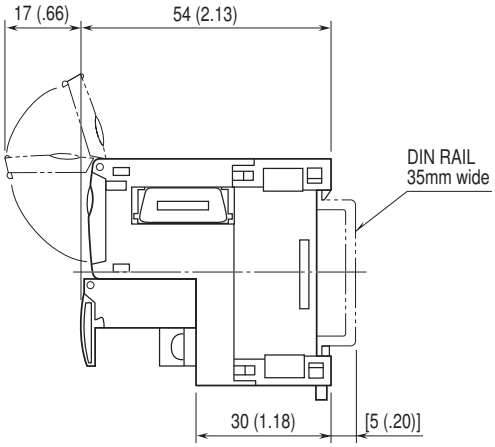

■ EXTENSION MODULE, 8 POINTS

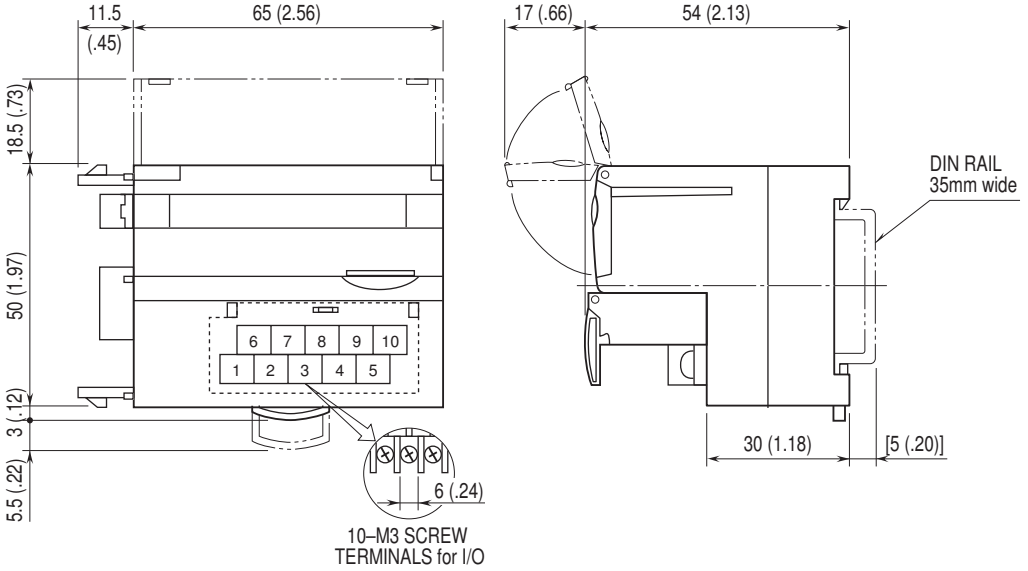

■ EXTENSION MODULE, 16 POINTS

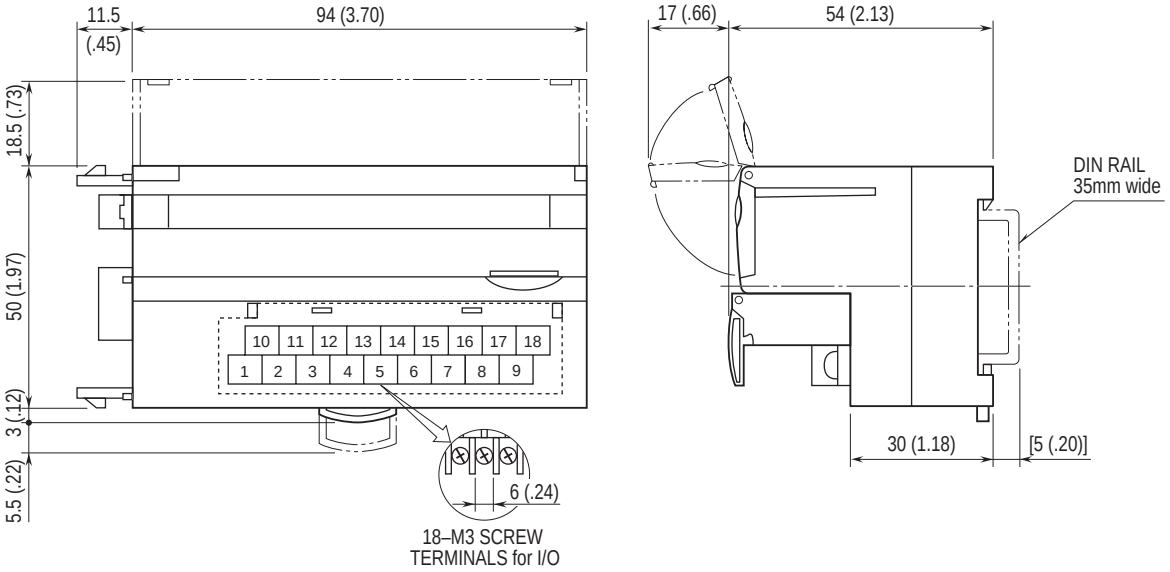

DISCRETE INPUT MODULE, 16 points

MODEL: R7M-DA16

SPECIFICATIONS

Common: Positive or negative common (NPN/PNP) per 16 points
Number of I/O: Input, 16 points
Maximum inputs applicable at once: No limit (at 24 V DC)
Input status indicator: LED turns ON with contact ON
Isolation: Input to Modbus or FG to power input
Rated input voltage: 24 V DC ±10 %; ripple 5 %p-p max.
ON voltage / current: ≥ 15 V DC (input – COM) / ≥ 3.5 mA
OFF voltage / current: ≤ 5 V DC (input – COM) / ≤ 1 mA
Input current: ≤ 5.5 mA per point at 24 V DC
Input resistance: Approx. 4.4 kΩ
ON delay: ≤ 2.0 msec.
OFF delay: ≤ 2.0 msec.

OPERATING MODE SETTING

(*) Factory setting
Caution ! - SW1-3 through 1-8 are unused. Be sure to turn off unused ones.

• Extension (SW1-1, 1-2)

SW1-1	SW1-2	Extension
OFF	OFF	No extension (*)
ON	OFF	Discrete input, 8 or 16 points
OFF	ON	Discrete output, 8 or 16 points

TERMINAL ASSIGNMENTS

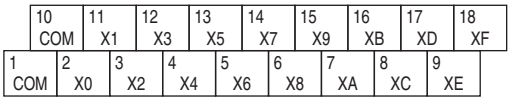

NO.	ID	FUNCTION	NO.	ID	FUNCTION
1	COM	Common	10	COM	Common
2	X0	Input 0	11	X1	Input 1
3	X2	Input 2	12	X3	Input 3
4	X4	Input 4	13	X5	Input 5
5	X6	Input 6	14	X7	Input 7
6	X8	Input 8	15	X9	Input 9
7	XA	Input 10	16	XB	Input 11
8	XC	Input 12	17	XD	Input 13
9	XE	Input 14	18	XF	Input 15

CIRCUIT DIAGRAM

Note: In order to improve EMC performance, bond the FG terminal to ground.
Caution: FG terminal is NOT a protective conductor terminal.

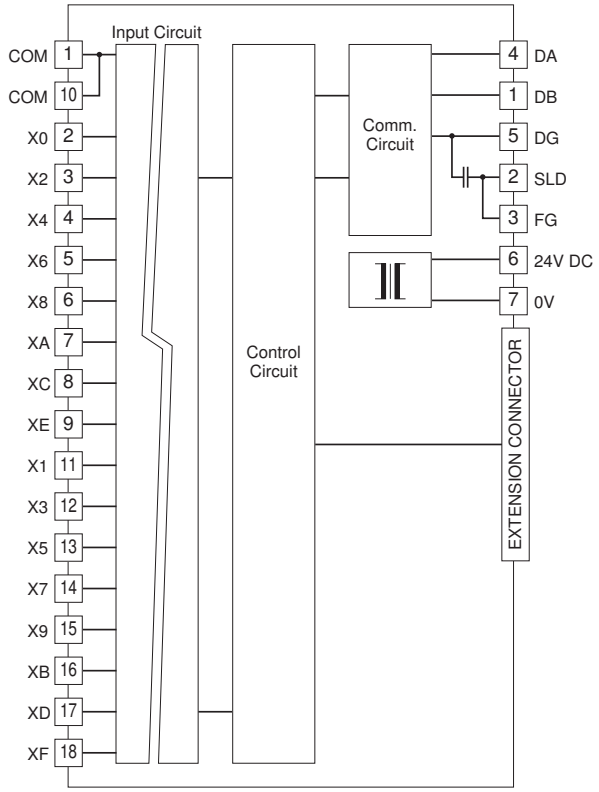

Input Circuit

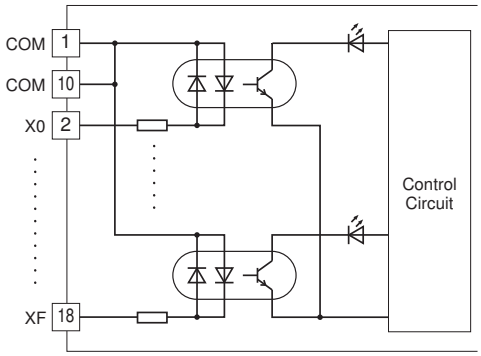

Input Connection Examples

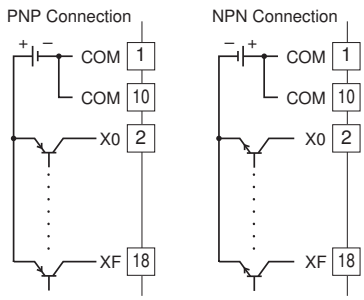

DISCRETE INPUT MODULE, 16 points

(115.2 kbps)

MODEL: R7M-DA16F

SPECIFICATIONS

Common: Positive or negative common (NPN/PNP) per 16 points
Number of I/O: Input, 16 points
Maximum inputs applicable at once: No limit (at 24 V DC)
Input status indicator: LED turns ON with contact ON
Isolation: Input to Modbus or FG to power input
Rated input voltage: 24 V DC ±10 %; ripple 5 %p-p max.
ON voltage / current: ≥ 15 V DC (input – COM) / ≥ 3.5 mA
OFF voltage / current: ≤ 5 V DC (input – COM) / ≤ 1 mA
Input current: ≤ 5.5 mA per point at 24 V DC
Input resistance: Approx. 4.4 kΩ
ON delay: ≤ 0.5 msec.
OFF delay: ≤ 1.0 msec.

OPERATING MODE SETTING

(*) Factory setting
Caution ! - SW1-3 through 1-8 are unused. Be sure to turn off unused ones.

• Extension (SW1-1, 1-2)

SW1-1	SW1-2	Extension
OFF	OFF	No extension (*)
ON	OFF	Discrete input, 8 or 16 points
OFF	ON	Discrete output, 8 or 16 points

TERMINAL ASSIGNMENTS

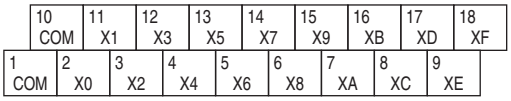

NO.	ID	FUNCTION	NO.	ID	FUNCTION
1	COM	Common	10	COM	Common
2	X0	Input 0	11	X1	Input 1
3	X2	Input 2	12	X3	Input 3
4	X4	Input 4	13	X5	Input 5
5	X6	Input 6	14	X7	Input 7
6	X8	Input 8	15	X9	Input 9
7	XA	Input 10	16	XB	Input 11
8	XC	Input 12	17	XD	Input 13
9	XE	Input 14	18	XF	Input 15

CIRCUIT DIAGRAM

Note: In order to improve EMC performance, bond the FG terminal to ground.
Caution: FG terminal is NOT a protective conductor terminal.

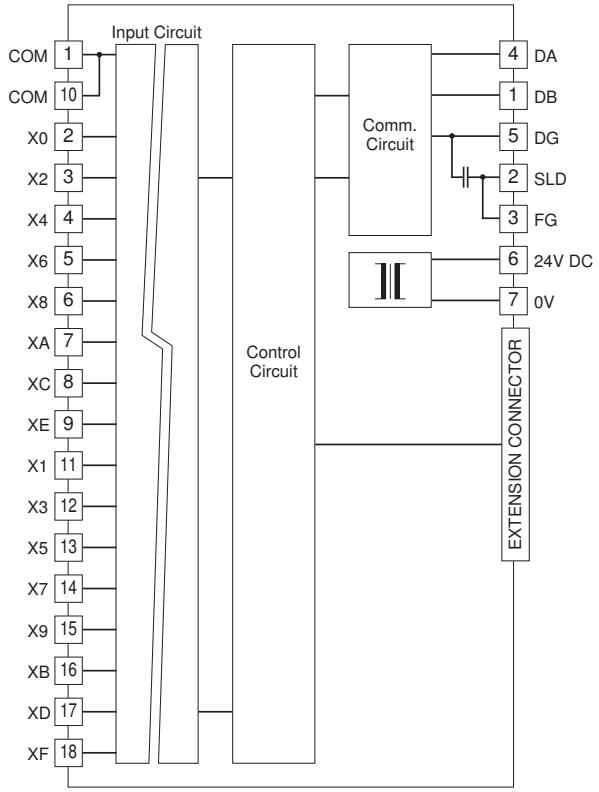

Input Circuit

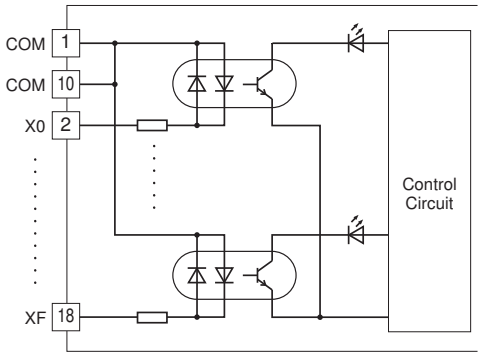

Input Connection Examples

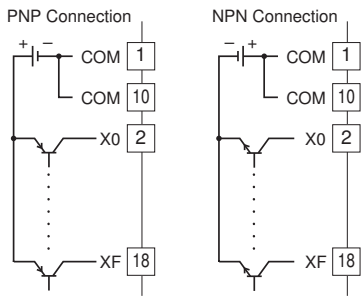

NPN TRANSISTOR OUTPUT MODULE, 16 points

MODEL: R7M-DC16A

SPECIFICATIONS

Common: Negative common (NPN) per 16 points
Number of I/O: Output, 16 points
Maximum outputs applicable at once: No limit (at 24 V DC)
Output status indicator: LED turns ON with contact ON
Isolation: Output to Modbus or FG to power input
Rated load voltage: 24 V DC ±10 %
Rated output current: 0.25 A per point, 2.0 A per common
Residual voltage: ≤ 1.2 V
Leakage current: ≤ 0.1 mA
ON delay: ≤ 0.5 msec.
OFF delay: ≤ 1.5 msec.
(When driving an inductive load, connect a diode in parallel with the load.)

OPERATING MODE SETTING

(*) Factory setting
Caution ! - SW1-3, 1-5 through 1-8 are unused. Be sure to turn off unused ones.

• Output at the Loss of Communication (SW1-4)

SW1-4	Output at the loss of communication
OFF	Reset the output (turned off)
ON	Hold the output (*) (maintains the last data received normally)

• Extension (SW1-1, 1-2)

SW1-1	SW1-2	Extension
OFF	OFF	No extension (*)
ON	OFF	Discrete input, 8 or 16 points
OFF	ON	Discrete output, 8 or 16 points

TERMINAL ASSIGNMENTS

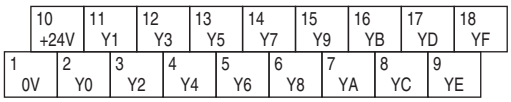

NO.	ID	FUNCTION	NO.	ID	FUNCTION
1	0 V	0 V (common)	10	+24 V	24 V DC
2	Y0	Output 0	11	Y1	Output 1
3	Y2	Output 2	12	Y3	Output 3
4	Y4	Output 4	13	Y5	Output 5
5	Y6	Output 6	14	Y7	Output 7
6	Y8	Output 8	15	Y9	Output 9
7	YA	Output 10	16	YB	Output 11
8	YC	Output 12	17	YD	Output 13
9	YE	Output 14	18	YF	Output 15

CIRCUIT DIAGRAM

Note: In order to improve EMC performance, bond the FG terminal to ground.
Caution: FG terminal is NOT a protective conductor terminal.

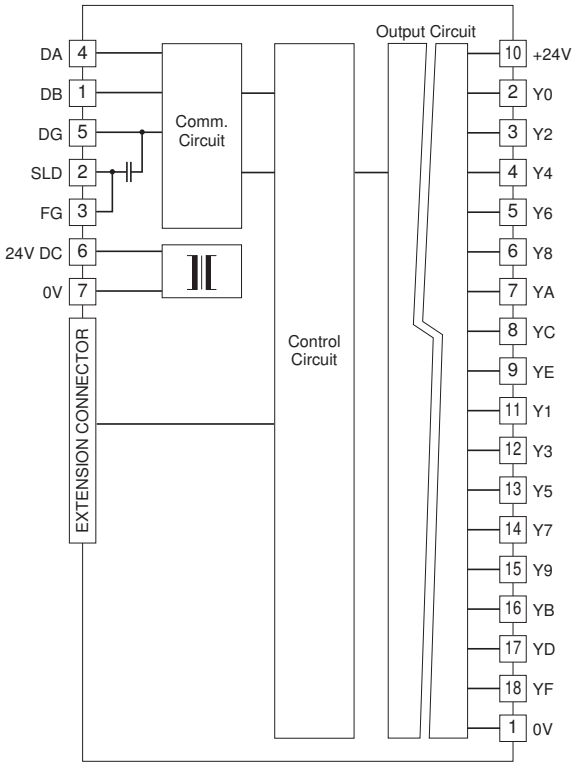

Output Circuit

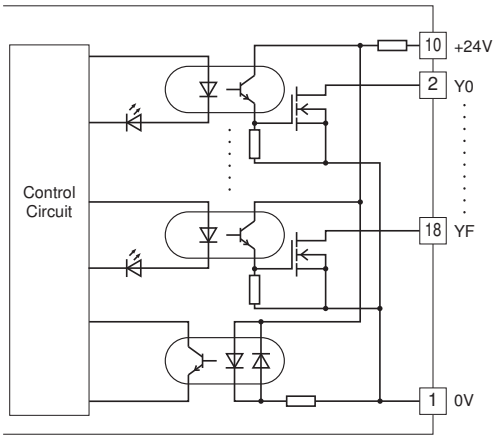

Output Connection Example

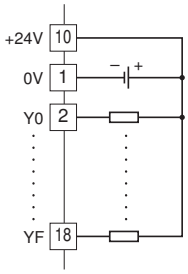

PNP TRANSISTOR OUTPUT MODULE, 16 points

MODEL: R7M-DC16B

SPECIFICATIONS

Common: Positive common (PNP) per 16 points
Number of I/O: Output, 16 points
Maximum outputs applicable at once: No limit (at 24 V DC)
Output status indicator: LED turns ON with contact ON
Isolation: Output to Modbus or FG to power input
Rated load voltage: 24 V DC ±10 %
Rated output current: 0.25 A per point, 2.0 A per common
Residual voltage: ≤ 1.2 V
Leakage current: ≤ 0.1 mA
ON delay: ≤ 0.5 msec.
OFF delay: ≤ 1.5 msec.
(When driving an inductive load, connect a diode in parallel with the load.)

OPERATING MODE SETTING

(*) Factory setting
Caution ! - SW1-3, 1-5 through 1-8 are unused. Be sure to turn off unused ones.

• Output at the Loss of Communication (SW1-4)

SW1-4	Output at the loss of communication
OFF	Reset the output (turned off)
ON	Hold the output (*) (maintains the last data received normally)

• Extension (SW1-1, 1-2)

SW1-1	SW1-2	Extension
OFF	OFF	No extension (*)
ON	OFF	Discrete input, 8 or 16 points
OFF	ON	Discrete output, 8 or 16 points

TERMINAL ASSIGNMENTS

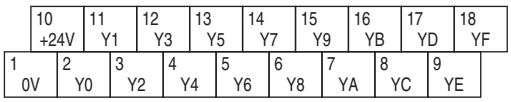

NO.	ID	FUNCTION	NO.	ID	FUNCTION
1	0 V	0 V	10	+24 V	24 V DC (common)
2	Y0	Output 0	11	Y1	Output 1
3	Y2	Output 2	12	Y3	Output 3
4	Y4	Output 4	13	Y5	Output 5
5	Y6	Output 6	14	Y7	Output 7
6	Y8	Output 8	15	Y9	Output 9
7	YA	Output 10	16	YB	Output 11
8	YC	Output 12	17	YD	Output 13
9	YE	Output 14	18	YF	Output 15

CIRCUIT DIAGRAM

Note: In order to improve EMC performance, bond the FG terminal to ground.
Caution: FG terminal is NOT a protective conductor terminal.

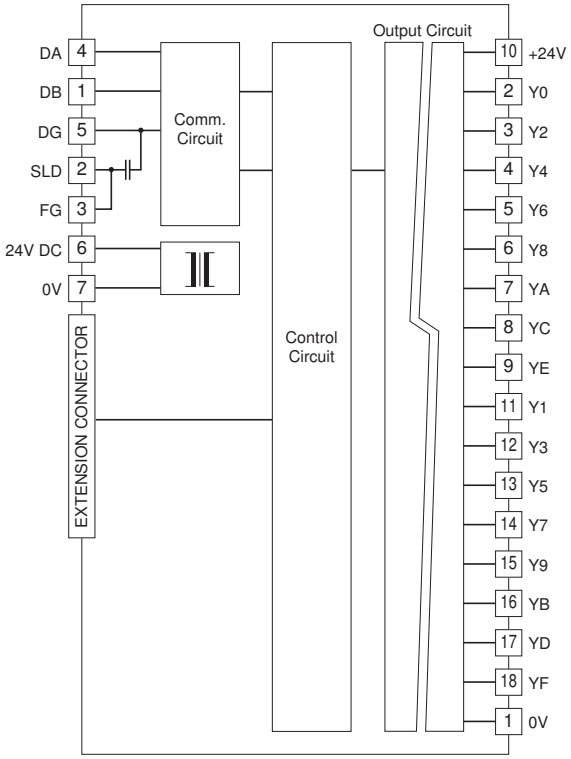

Output Circuit

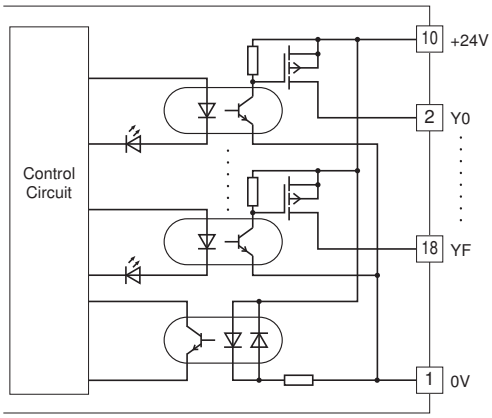

Output Connection Example

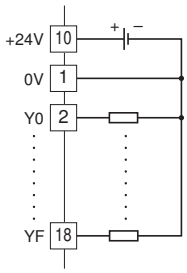

NPN DISCRETE INPUT &

NPN TRANSISTOR OUTPUT MODULE, 8 points each
(115.2 kbps)

MODEL: R7M-DAC16C

SPECIFICATIONS

■ COMMON SPECIFICATIONS
Input common: Positive common per 8 points
Output common: Negative common per 8 points
Number of I/O: Input, 8 points; Output, 8 points
Maximum I/O applicable at once: No limit (at 24 V DC)
I/O status indicator: LED turns ON with contact ON
Isolation: I/O to power input to Modbus or FG
■ INPUT
Rated input voltage: 24 V DC ±10 %; ripple 5 %p-p max.
ON voltage/current: ≥ 15 V DC (input-C+) / ≥ 3.5 mA
OFF voltage/current: ≤ 5 V DC (input-C+) / ≤ 1 mA
Input current: ≤ 5.5 mA per point at 24 V DC
Input resistance: Approx. 4.4 kΩ
ON delay: ≤ 0.5 msec.
OFF delay: ≤ 1.0 msec.
■ OUTPUT
Rated load voltage: 24 V DC ±10 %
Rated output current: 0.1 A per point, 0.8 A per common
Residual voltage: ≤ 1.2 V
Leakage current: ≤ 0.1 mA
ON delay: ≤ 0.5 msec.
OFF delay: ≤ 1.0 msec.
Overload current protection function: Limits the current value when overcurrent is detected
Overheat Protection Function:
Turns OFF the output when overheat is detected
(When driving an inductive load, connect a diode in parallel with the load.)

OPERATING MODE SETTING

(*) Factory setting

• Extension (SW1-1, 1-2)

SW1-1	SW1-2	Extension
OFF	OFF	No extension (*)
ON	OFF	Discrete input, 8 or 16 points
OFF	ON	Discrete output, 8 or 16 points

• Output Operation Mode (SW1-3)

SW1-3	Output operation mode
OFF	Disable (*)
ON	Enable

Output switching mode can be independently selected by 2 outputs with PC Configuration software. An example of setting is given below.
Output 0: Maintained output
Output 1: Maintained output
Output 2: Momentary output
Output 3: Momentary output
Output 4: Momentary output
Output 5: Momentary output
Output 6: Maintained output
Output 7: Maintained output

• Output at the Loss of Communication (SW1-4)

SW1-4	Output at the loss of communication
OFF	Reset the output (turned off)
ON	Hold the output (*) (maintains the last data received normally)

• Output Switching Mode (SW1-5)

SW1-5	Output switching mode
OFF	Maintained Output Mode (*)
ON	Momentary Output Mode

SW1-5 setting is disregarded when SW1-3 is set to ON.

• Output ON Time (SW1-6, 1-7, 1-8)

SW1-6	SW1-7	SW1-8	ON Time
OFF	OFF	OFF	100 ms (*)
ON	OFF	OFF	200 ms
OFF	ON	OFF	300 ms
ON	ON	OFF	500 ms
OFF	OFF	ON	1 s
ON	OFF	ON	2 s
OFF	ON	ON	5 s
ON	ON	ON	10 s

TERMINAL ASSIGNMENTS

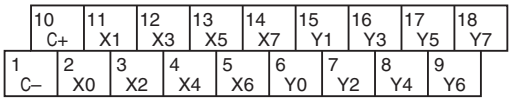

NO.	ID	FUNCTION	NO.	ID	FUNCTION
1	C–	Common–	10	C+	Common+
2	X0	Input 0	11	X1	Input 1
3	X2	Input 2	12	X3	Input 3
4	X4	Input 4	13	X5	Input 5
5	X6	Input 6	14	X7	Input 7
6	Y0	Output 0	15	Y1	Output 1
7	Y2	Output 2	16	Y3	Output 3
8	Y4	Output 4	17	Y5	Output 5
9	Y6	Output 6	18	Y7	Output 7

CIRCUIT DIAGRAM

Note: In order to improve EMC performance, bond the FG terminal to ground.
Caution: FG terminal is NOT a protective conductor terminal.

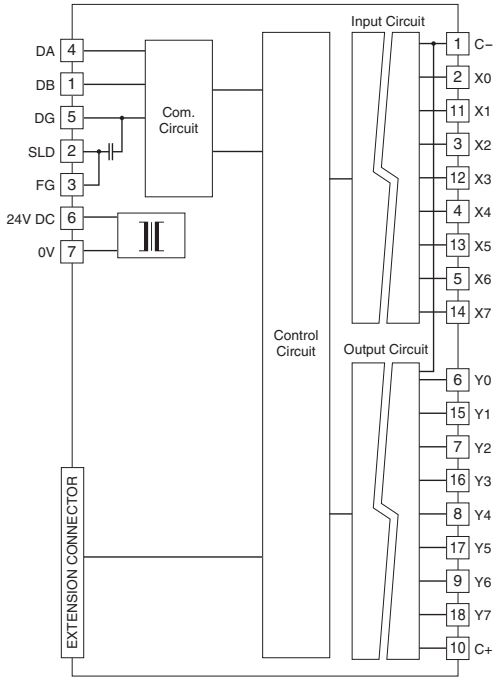

■ **Input Circuit**

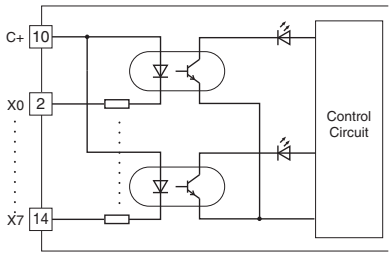

■ **Output Circuit**

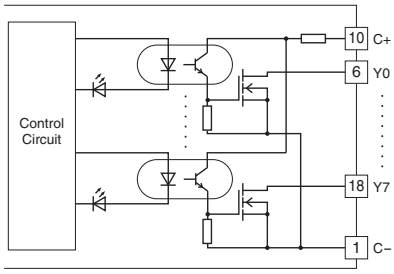

■ **I/O Connection Example**

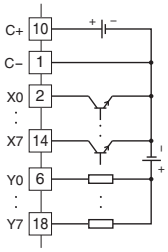

PNP DISCRETE INPUT &

PNP TRANSISTOR OUTPUT MODULE, 8 points each
(115.2 kbps)

MODEL: R7M-DAC16D

SPECIFICATIONS

■ COMMON SPECIFICATIONS
Input common: Negative common per 8 points
Output common: Positive common per 8 points
Number of I/O: Input, 8 points; Output, 8 points
Maximum I/O applicable at once: No limit (at 24 V DC)
I/O status indicator: LED turns ON with contact ON
Isolation: I/O to power input to Modbus or FG

■ INPUT
Rated input voltage: 24 V DC ±10 %; ripple 5 %p-p max.
ON voltage/current: ≥ 15 V DC (input - C-) / ≥ 3.5 mA
OFF voltage/current: ≤ 5 V DC (input - C-) / ≤ 1 mA
Input current: ≤ 5.5 mA per point at 24 V DC
Input resistance: Approx. 4.4 kΩ
ON delay: ≤ 0.5 msec.
OFF delay: ≤ 1.0 msec.

■ OUTPUT
Rated load voltage: 24 V DC ±10 %
Rated output current: 0.1 A per point, 0.8 A per common
Residual voltage: ≤ 1.2 V
Leakage current: ≤ 0.1 mA
ON delay: ≤ 0.5 msec.
OFF delay: ≤ 1.0 msec.
Overload current protection function: Limits the current value when overcurrent is detected
Overheat Protection Function:
Turns OFF the output when overheat is detected
(When driving an inductive load, connect a diode in parallel with the load.)

OPERATING MODE SETTING

(*) Factory setting

• Extension (SW1-1, 1-2)

SW1-1	SW1-2	Extension
OFF	OFF	No extension (*)
ON	OFF	Discrete input, 8 or 16 points
OFF	ON	Discrete output, 8 or 16 points

• Output Operation Mode (SW1-3)

SW1-3	Output operation mode
OFF	Disable (*)
ON	Enable

Output switching mode can be independently selected by 2 outputs with PC Configuration software. An example of setting is given below.
Output 0: Maintained output
Output 1: Maintained output
Output 2: Momentary output
Output 3: Momentary output
Output 4: Momentary output
Output 5: Momentary output
Output 6: Maintained output
Output 7: Maintained output

• Output at the Loss of Communication (SW1-4)

SW1-4	Output at the loss of communication
OFF	Reset the output (turned off)
ON	Hold the output (*) (maintains the last data received normally)

• Output Switching Mode (SW1-5)

SW1-5	Output switching mode
OFF	Maintained Output Mode (*)
ON	Momentary Output Mode

SW1-5 setting is disregarded when SW1-3 is set to ON.

• Output ON Time (SW1-6, 1-7, 1-8)

SW1-6	SW1-7	SW1-8	ON Time
OFF	OFF	OFF	100 ms (*)
ON	OFF	OFF	200 ms
OFF	ON	OFF	300 ms
ON	ON	OFF	500 ms
OFF	OFF	ON	1 s
ON	OFF	ON	2 s
OFF	ON	ON	5 s
ON	ON	ON	10 s

TERMINAL ASSIGNMENTS

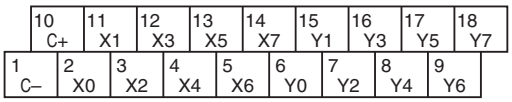

NO.	ID	FUNCTION	NO.	ID	FUNCTION
1	C–	Common–	10	C+	Common+
2	X0	Input 0	11	X1	Input 1
3	X2	Input 2	12	X3	Input 3
4	X4	Input 4	13	X5	Input 5
5	X6	Input 6	14	X7	Input 7
6	Y0	Output 0	15	Y1	Output 1
7	Y2	Output 2	16	Y3	Output 3
8	Y4	Output 4	17	Y5	Output 5
9	Y6	Output 6	18	Y7	Output 7

CIRCUIT DIAGRAM

Note: In order to improve EMC performance, bond the FG terminal to ground.
Caution: FG terminal is NOT a protective conductor terminal.

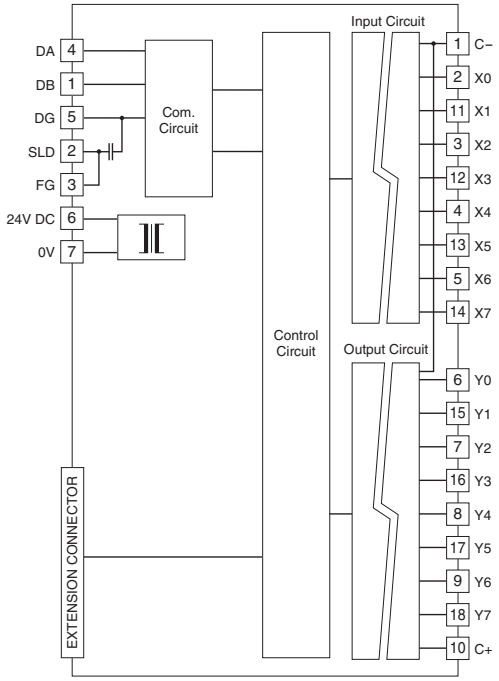

■ **Input Circuit**

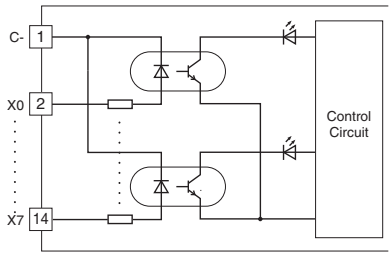

■ **Output Circuit**

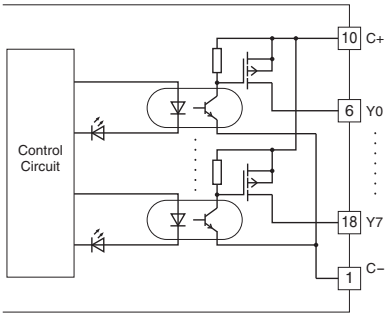

■ **I/O Connection Example**

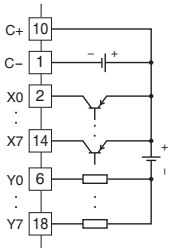

RELAY CONTACT OUTPUT MODULE, 8 points

MODEL: R7M-DC8C

SPECIFICATIONS

Common: 1 common per 4 points (4 terminals)
Maximum current load: 2.0 A per point
Common current: Max. 8 A (4 terminals)
Number of I/O: Relay contact output, 8 points
Maximum outputs applicable at once: No limit (at 24 V DC)
Output status indicator: LED turns ON with contact ON
Isolation: Output to Modbus or FG to power input
Relay driving power: 24 V DC ±10 %, ≥ 60 mA
Rated load: 250 V AC @ 2 A (cos ø = 1)
30 V DC @ 2 A (resistive load)
(When it is used as a product relevant to EU directive, it should be used under the Installation Category I, 125 V AC or less.)
Maximum switching voltage: 250 V AC or 30 V DC
Maximum switching power: 500 VA or 60 W
Minimum load: 24 V DC @5 mA
Mechanical life: 2×10^7 cycles (rate 300/min.)
When driving an inductive load, external contact protection and noise quenching are recommended.
ON delay: ≤ 10 msec.
OFF delay: ≤ 10 msec.

OPERATING MODE SETTING

(*) Factory setting
Caution ! - SW1-1 through 1-3, 1-5 through 1-8 are unused. Be sure to turn off the unused ones.

• Output at the Loss of Communication (SW1-4)

SW1-4	Output at the loss of communication
OFF	Reset the output (turned off)
ON	Hold the output (*) (maintains the last data received normally)

TERMINAL ASSIGNMENTS

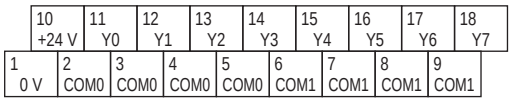

NO.	ID	FUNCTION	NO.	ID	FUNCTION
1	0 V	0 V	10	+24 V	24 V DC
2	COM0	Common 0	11	Y0	Output 0
3	COM0	Common 0	12	Y1	Output 1
4	COM0	Common 0	13	Y2	Output 2
5	COM0	Common 0	14	Y3	Output 3
6	COM1	Common 1	15	Y4	Output 4
7	COM1	Common 1	16	Y5	Output 5
8	COM1	Common 1	17	Y6	Output 6
9	COM1	Common 1	18	Y7	Output 7

CIRCUIT DIAGRAM

Note: In order to improve EMC performance, bond the FG terminal to ground.
Caution: FG terminal is NOT a protective conductor terminal.

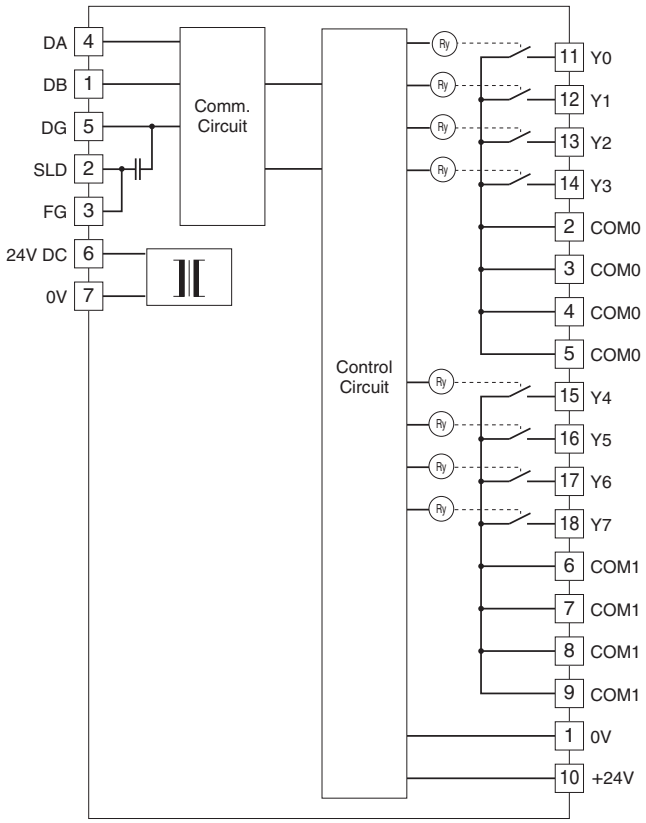

■ **Output Connection Example**

4 points / common

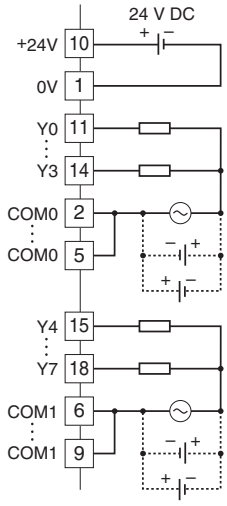

8 points / common

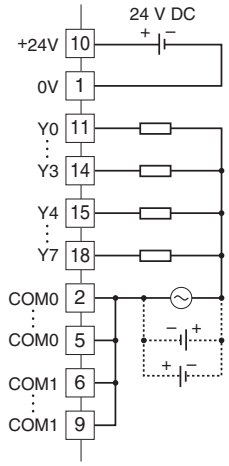

REMOTE CONTROL RELAY CONTROL MODULE, 8 points
(115.2 kbps)

MODEL: R7M-RR8

RECOMMENDED PRODUCTS (OPERATION CHECKED)

Remote control relay:
BR-12D, BR-22D (Mitsubishi Electric)
WR6165 (Panasonic)
Remote control transformer:
BRT-10B, BRT-20B (Mitsubishi Electric)
WR2301 (Panasonic)

SPECIFICATIONS

Common: Common per all points
Number of I/O: Output, 8 points
Maximum outputs applicable at once: No limit
I/O status indicator: Feedback input status turns on with the input supplied.
Output status LED turns on with the output ON.
Isolation: Output to power input to Modbus or FG
Pulse output time: 100 msec.
Rated load voltage: 24 V AC ±10 % (supplied by the remote control transformer)
Load voltage frequency: 50 / 60 Hz

OPERATING MODE SETTING

(*) Factory setting
Caution ! - SW1-3 through 1-8 are unused. Be sure to turn off unused ones.

• Extension (SW1-1, 1-2)

SW1-1	SW1-2	Extension
OFF	OFF	No extension (*)
ON	OFF	Discrete input, 8 or 16 points
OFF	ON	Discrete output, 8 or 16 points

TERMINAL ASSIGNMENTS

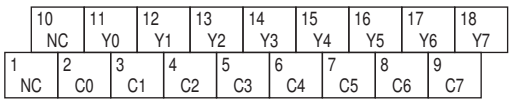

NO.	ID	FUNCTION	NO.	ID	FUNCTION
1	NC	No connection	10	NC	No connection
2	C0	Common	11	Y0	Output 0
3	C1	Common	12	Y1	Output 1
4	C2	Common	13	Y2	Output 2
5	C3	Common	14	Y3	Output 3
6	C4	Common	15	Y4	Output 4
7	C5	Common	16	Y5	Output 5
8	C6	Common	17	Y6	Output 6
9	C7	Common	18	Y7	Output 7

CIRCUIT DIAGRAM

Caution: FG terminal is NOT a protective conductor terminal.

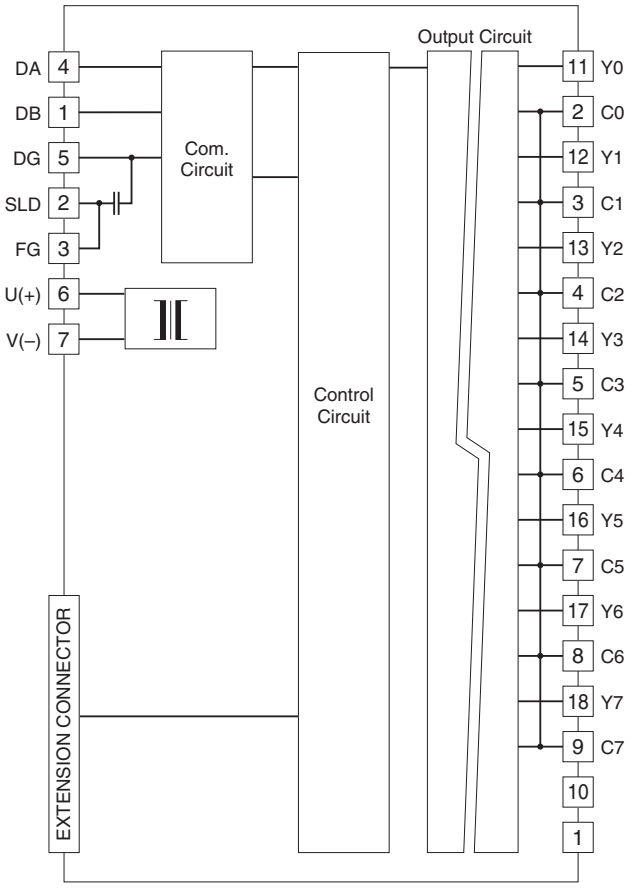

■ **Output Connection Example**

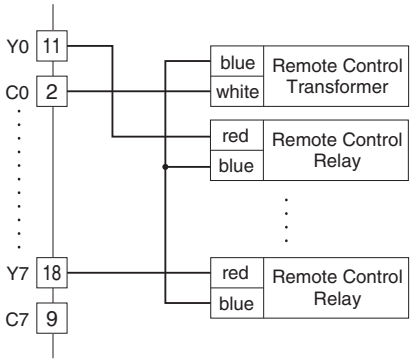

DC VOLTAGE/CURRENT INPUT MODULE, 4 points

MODEL: R7M-SV4

SPECIFICATIONS

Isolation: Input 0 to input 1 to input 2 to input 3 to Modbus or FG to power input

Converted data range: 0 – 10000 of the input range

• Input range

Wide span voltage: -10 – +10 V DC, -5 – +5 V DC, 0 – 10 V DC, 0 – 5 V DC, 1 – 5 V DC

Narrow span voltage: -1 – +1 V DC, 0 – 1 V DC, -0.5 – +0.5 V DC

Current range: -20 – +20 mA DC, 0 – 20 mA DC, 4 – 20 mA DC

• Input resistance

Wide span voltage: ≥ 1 MΩ

Narrow span voltage: ≥ 100 kΩ

Current range: 70 Ω

Conversion rate / conversion accuracy: 10 msec./±0.8 %, 20 msec./±0.4 %, 40 msec./±0.2 %, 80 msec./±0.1 %

Response time: Conversion rate × 2 + 50 msec. (0 – 90 %)

Temperature coefficient: ±0.015 %/°C (±0.008 %/°F)

OPERATING MODE SETTING

(*) Factory setting

• Input Range (SW1-5, 1-6, 1-7, 1-8)

SW1-5	SW1-6	SW1-7	SW1-8	Input range
OFF	OFF	OFF	OFF	-10 – +10 V DC (*)
ON	OFF	OFF	OFF	-5 – +5 V DC
OFF	ON	OFF	OFF	-1 – +1 V DC
ON	ON	OFF	OFF	0 – 10 V DC
OFF	OFF	ON	OFF	0 – 5 V DC
ON	OFF	ON	OFF	1 – 5 V DC
OFF	ON	ON	OFF	0 – 1V DC
ON	ON	ON	OFF	-0.5 – +0.5 V DC
ON	OFF	OFF	ON	-20 – +20 mA DC
OFF	ON	OFF	ON	4 – 20 mA DC
ON	ON	OFF	ON	0 – 20 mA DC
ON	ON	ON	ON	PC Configurator setting

• Conversion Rate / Accuracy (SW1-3, 1-4)

SW1-3	SW1-4	Conversion rate / Accuracy
OFF	OFF	80 msec. / ±0.1% (*)
ON	OFF	40 msec. / ±0.2%
OFF	ON	20 msec. / ±0.4%
ON	ON	10 msec. / ±0.8%

• Extension (SW1-1, 1-2)

SW1-1	SW1-2	Extension
OFF	OFF	No extension (*)
ON	OFF	Discrete input, 8 or 16 points
OFF	ON	Discrete output, 8 or 16 points

TERMINAL ASSIGNMENTS

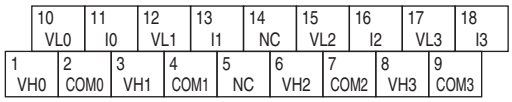

NO.	ID	FUNCTION	NO.	ID	FUNCTION
1	VH0	Wide span volt. 0	10	VL0	Narrow span volt. 0
2	COM0	Common 0	11	I0	Current range 0
3	VH1	Wide span volt. 1	12	VL1	Narrow span volt. 1
4	COM1	Common 1	13	I1	Current range 1
5	NC	No connection	14	NC	No connection
6	VH2	Wide span volt. 2	15	VL2	Narrow span volt. 2
7	COM2	Common 2	16	I2	Current range 2
8	VH3	Wide span volt. 3	17	VL3	Narrow span volt. 3
9	COM3	Common 3	18	I3	Current range 3

CIRCUIT DIAGRAM

Note: In order to improve EMC performance, bond the FG terminal to ground.

Caution: FG terminal is NOT a protective conductor terminal.

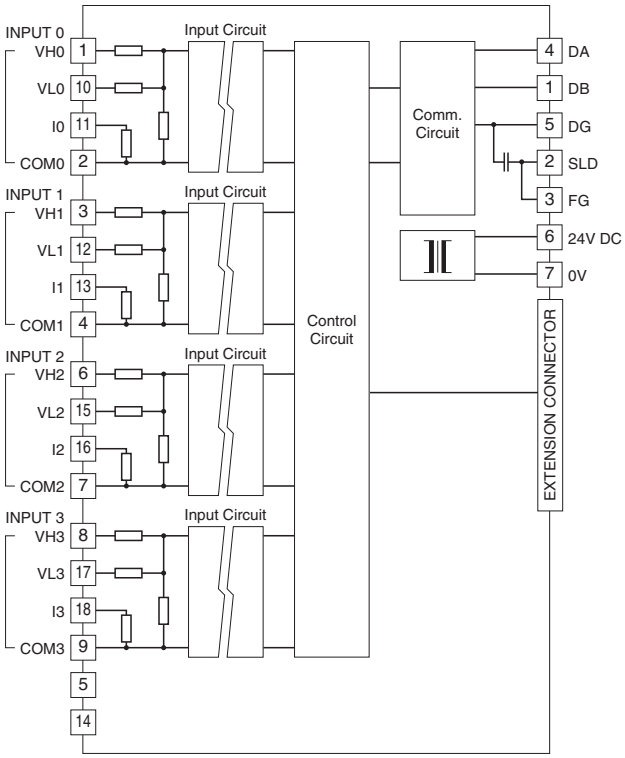

■ **Input Connection Examples**

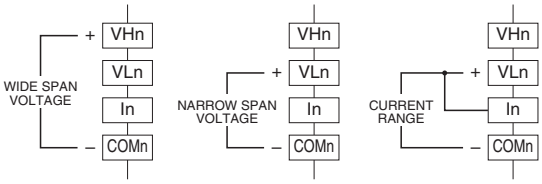

Be sure to close across VLn and In terminals for a current input.

THERMOCOUPLE INPUT MODULE, 4 points

MODEL: R7M-TS4

SPECIFICATIONS

Isolation: Input 0 to input 1 to input 2 to input 3 to Modbus or FG to power input
Converted data range: Engineering unit value (°C, K) × 10 (integer); No multiplication for °F
Linearization: Standard
Thermocouple: K, E, J, T, B, R, S, C, N, U, L, P, PR
Cold junction compensation: CJC sensor attached to the input terminals
Input resistance: ≥ 30 kΩ
Burnout: Upscale or downscale selectable with the DIP SW
Burnout sensing: ≤ 0.1 µA
Conversion accuracy: ±1°C (±1.8°F);
±2.0°C (±3.6°F) for B, R, S, C, PR
Conversion rate: 250 msec. or 500 msec.
Response time: Conversion rate × 2 + 50 msec. (0 – 90 %)
Temperature coefficient: ±0.015 %/°C (±0.008 %/°F) of max. span
CJC error: ±1.0°C at 25°C ±10°C
(±1.8°F at 77°F ±18°F)
±1.5°C (±2.7°F) for R, S, PR

T/C	BURNOUT INDICATION (°C)		CONFORMANCE RANGE (°C)
	Downscale	Upscale	
K (CA)	-272	+1472	-150 to +1370
E (CRC)	-272	+1120	-170 to +1000
J (IC)	-260	+1300	-180 to +1200
T (CC)	-272	+ 500	-170 to + 400
B (RH)	24	1920	1000 to 1760
R	-100	+1860	380 to 1760
S	-100	+1860	400 to 1760
C (WRe 5-26)	-52	+2416	100 to 2315
N	-272	+1400	-130 to +1300
U	-252	+ 700	-200 to +600
L	-252	+1000	-200 to +900
P (Platinel II)	-52	+1496	0 to 1395
(PR)	-52	+1860	300 to 1760

T/C	BURNOUT INDICATION (°F)		CONFORMANCE RANGE (°F)
	Downscale	Upscale	
K (CA)	-458	+2682	-238 to +2498
E (CRC)	-458	+2048	-274 to +1832
J (IC)	-436	+2372	-292 to +2192
T (CC)	-458	+932	-274 to +752
B (RH)	75	3488	1832 to 3200
R	-148	+3380	716 to 3200
S	-148	+3380	752 to 3200
C (WRe 5-26)	-62	+4381	212 to 4199
N	-458	+2552	-202 to +2372
U	-422	+1292	-328 to +1112
L	-422	+1832	-328 to +1652
P (Platinel II)	-62	+2725	32 to 2543
(PR)	-62	+3380	572 to 3200

OPERATING MODE SETTING

(*) Factory setting

• Thermocouple Type (SW1-5, 1-6, 1-7, 1-8)

SW1-5	SW1-6	SW1-7	SW1-8	Thermocouple type
OFF	OFF	OFF	OFF	K (CA) (*)
ON	OFF	OFF	OFF	E (CRC)
OFF	ON	OFF	OFF	J (IC)
ON	ON	OFF	OFF	T (CC)
OFF	OFF	ON	OFF	B (RH)
ON	OFF	ON	OFF	R
OFF	ON	ON	OFF	S
ON	ON	ON	OFF	C (WRe 5-26)
OFF	OFF	OFF	ON	N
ON	OFF	OFF	ON	U
OFF	ON	OFF	ON	L
ON	ON	OFF	ON	P (Platinel II)
OFF	OFF	ON	ON	(PR)
ON	ON	ON	ON	PC Configurator setting

• Conversion Rate (SW1-3)

SW1-3	Conversion rate
OFF	250 msec. (*)
ON	500 msec.

• Burnout (SW1-4)

SW1-4	Burnout
OFF	Upscale (*)
ON	Downscale

• Extension (SW1-1, 1-2)

SW1-1	SW1-2	Extension
OFF	OFF	No extension (*)
ON	OFF	Discrete input, 8 or 16 points
OFF	ON	Discrete output, 8 or 16 points

TERMINAL ASSIGNMENTS

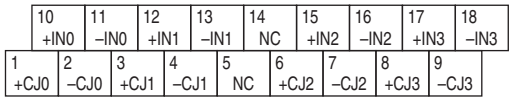

NO.	ID	FUNCTION	NO.	ID	FUNCTION
1	+CJ0	CJC + 0	10	+IN0	T/C + 0
2	–CJ0	CJC – 0	11	–IN0	T/C – 0
3	+CJ1	CJC + 1	12	+IN1	T/C + 1
4	–CJ1	CJC – 1	13	–IN1	T/C – 1
5	NC	No connection	14	NC	No connection
6	+CJ2	CJC + 2	15	+IN2	T/C + 2
7	–CJ2	CJC – 2	16	–IN2	T/C – 2
8	+CJ3	CJC + 3	17	+IN3	T/C + 3
9	–CJ3	CJC – 3	18	–IN3	T/C – 3

CIRCUIT DIAGRAM

Note: In order to improve EMC performance, bond the FG terminal to ground.
Caution: FG terminal is NOT a protective conductor terminal.

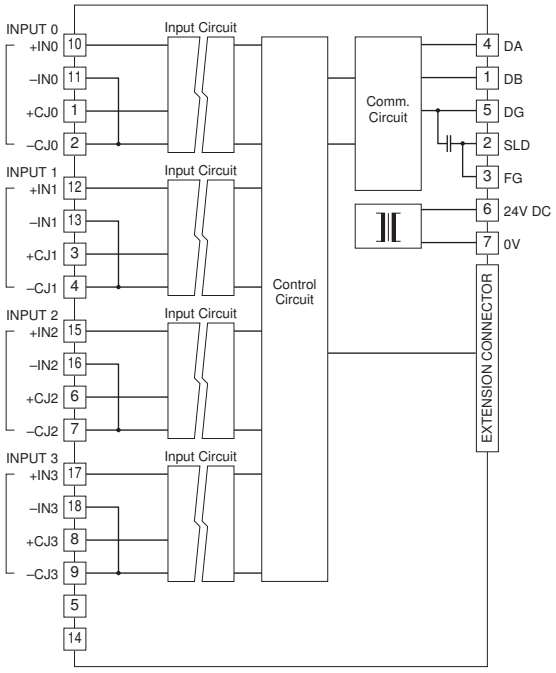

Input Connection Example

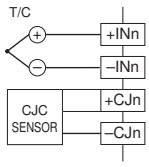

RTD INPUT MODULE, 4 points

MODEL: R7M-RS4

SPECIFICATIONS

Isolation: Input 0 to input 1 to input 2 to input 3 to Modbus or FG to power input
Converted data range: Engineering unit value (°C, K) × 10 (integer); No multiplication for °F
Linearization: Standard
RTD: Pt 100 (JIS '97, IEC), Pt 100 (JIS '89), JPt 100 (JIS '89), Pt 50 Ω (JIS '81), Ni 100, Cu 10, Cu 50
Sensing current: ≤ 1 mA
Input resistance: ≥ 1 MΩ
Maximum leadwire resistance: 100 Ω per wire
Burnout: Upscale or downscale selectable with the DIP SW
Burnout indication: Maximum value (upscale burnout) or minimum value (downscale burnout) of the usable range
Conversion accuracy: ±1°C (±1.8°F);
±3°C (±5.4°F) for Cu 10
Conversion rate: 250 msec. or 500 msec.
Response time: Conversion rate × 2 + 50 msec. (0 – 90 %)
Temperature coefficient: ±0.015 %/°C (±0.008 %/°F) of max. span

RTD	BURNOUT INDICATION (°C)		CONFORMANCE
	Downscale	Upscale	RANGE (°C)
Pt 100 (JIS '97, IEC)	-240	+900	-200 to +850
Pt 100 (JIS '89)	-240	+900	-200 to +660
JPt 100 (JIS '89)	-236	+560	-200 to +510
Pt 50 Ω (JIS '81)	-236	+700	-200 to +649
Ni 100	-100	+252	-80 to +250
Cu 10 @ 25°C	-212	+312	-50 to +250
Cu 50	-100	+200	-50 to +150

RTD	BURNOUT INDICATION (°F)		CONFORMANCE
	Downscale	Upscale	RANGE (°F)
Pt 100 (JIS '97, IEC)	-400	+1652	-328 to +1562
Pt 100 (JIS '89)	-400	+1652	-328 to +1220
JPt 100 (JIS '89)	-393	+1040	-328 to +950
Pt 50 Ω (JIS '81)	-393	+1292	-328 to +1200
Ni 100	-148	+486	-112 to +482
Cu 10 @ 25°C	-350	+594	-58 to +482
Cu 50	-148	+392	-58 to +302

OPERATING MODE SETTING

(*) Factory setting

• RTD Type (SW1-5, 1-6, 1-7, 1-8)

SW1-5	SW1-6	SW1-7	SW1-8	RTD Type
OFF	OFF	OFF	OFF	Pt 100 (JIS '97, IEC) (*)
ON	OFF	OFF	OFF	Pt 100 (JIS '89)
OFF	ON	OFF	OFF	JPt 100 (JIS '89)
ON	ON	OFF	OFF	Pt 50 Ω (JIS '81)
OFF	OFF	ON	OFF	Ni 100
ON	OFF	ON	OFF	Cu 10 @ 25°C
OFF	OFF	OFF	ON	Cu 50
ON	ON	ON	ON	PC Configurator setting

• Conversion Rate (SW1-3)

SW1-3	Conversion rate
OFF	250 msec. (*)
ON	500 msec.

• Burnout (SW1-4)

SW1-4	Burnout
OFF	Upscale (*)
ON	Downscale

• Extension (SW1-1, 1-2)

SW1-1	SW1-2	Extension
OFF	OFF	No extension (*)
ON	OFF	Discrete input, 8 or 16 points
OFF	ON	Discrete output, 8 or 16 points

TERMINAL ASSIGNMENTS

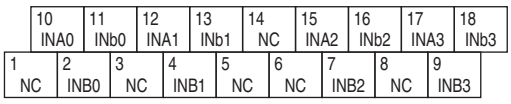

NO.	ID	FUNCTION	NO.	ID	FUNCTION
1	NC	No connection	10	INA0	RTD 0-A
2	INB0	RTD 0-B	11	INb0	RTD 0-b
3	NC	No connection	12	INA1	RTD 1-A
4	INB1	RTD 1-B	13	INb1	RTD 1-b
5	NC	No connection	14	NC	No connection
6	NC	No connection	15	INA2	RTD 2-A
7	INB2	RTD 2-B	16	INb2	RTD 2-b
8	NC	No connection	17	INA3	RTD 3-A
9	INB3	RTD 3-B	18	INb3	RTD 3-b

CIRCUIT DIAGRAM

Note: In order to improve EMC performance, bond the FG terminal to ground.
Caution: FG terminal is NOT a protective conductor terminal.

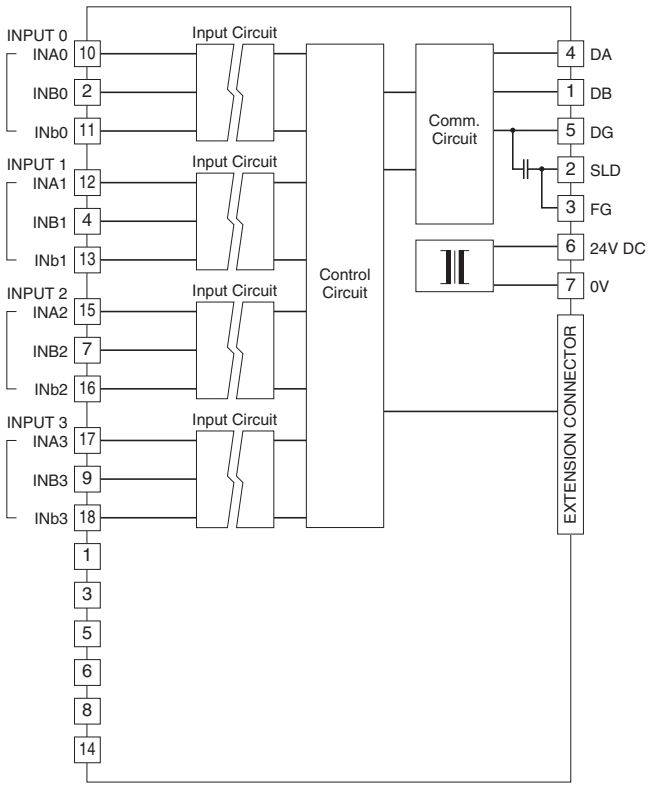

■ **Input Connection Example**

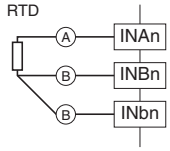

POTENTIOMETER INPUT MODULE, 4 points

MODEL: R7M-MS4

SPECIFICATIONS

Isolation: Input 0 to input 1 to input 2 to input 3 to Modbus or FG to power input
Converted data range: 0 – 10000 of the input range
Potentiometer: Total resistance 100 Ω – 20 kΩ
Minimum span: 50 % of total resistance
Excitation: Approx. 0.2 V DC
Conversion rate / conversion accuracy:
10 msec./±0.8 %, 20 msec./±0.4 %, 40 msec./±0.2 %, 80 msec./±0.1 %
Response time: Conversion rate × 2 + 50 msec. (0 – 90 %)
Temperature coefficient: ±0.015 %/°C (±0.008 %/°F)

OPERATING MODE SETTING

(*) Factory setting
Caution ! - SW1-5, 1-6, 1-7, 1-8 are unused. Be sure to turn off unused ones.

• Conversion Rate / Accuracy (SW1-3, 1-4)

SW1-3	SW1-4	Conversion rate / Accuracy
OFF	OFF	80 msec. / ±0.1% (*)
ON	OFF	40 msec. / ±0.2%
OFF	ON	20 msec. / ±0.4%
ON	ON	10 msec. / ±0.8%

• Extension (SW1-1, 1-2)

SW1-1	SW1-2	Extension
OFF	OFF	No extension (*)
ON	OFF	Discrete input, 8 or 16 points
OFF	ON	Discrete output, 8 or 16 points

TERMINAL ASSIGNMENTS

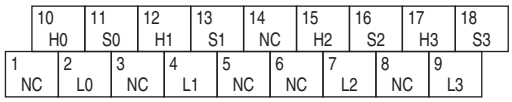

NO.	ID	FUNCTION	NO.	ID	FUNCTION
1	NC	No connection	10	H0	Pot H0
2	L0	Pot L0	11	S0	Pot S0
3	NC	No connection	12	H1	Pot H1
4	L1	Pot L1	13	S1	Pot S1
5	NC	No connection	14	NC	No connection
6	NC	No connection	15	H2	Pot H2
7	L2	Pot L2	16	S2	Pot S2
8	NC	No connection	17	H3	Pot H3
9	L3	Pot L3	18	S3	Pot S3

CIRCUIT DIAGRAM

Note: In order to improve EMC performance, bond the FG terminal to ground.
Caution: FG terminal is NOT a protective conductor terminal.

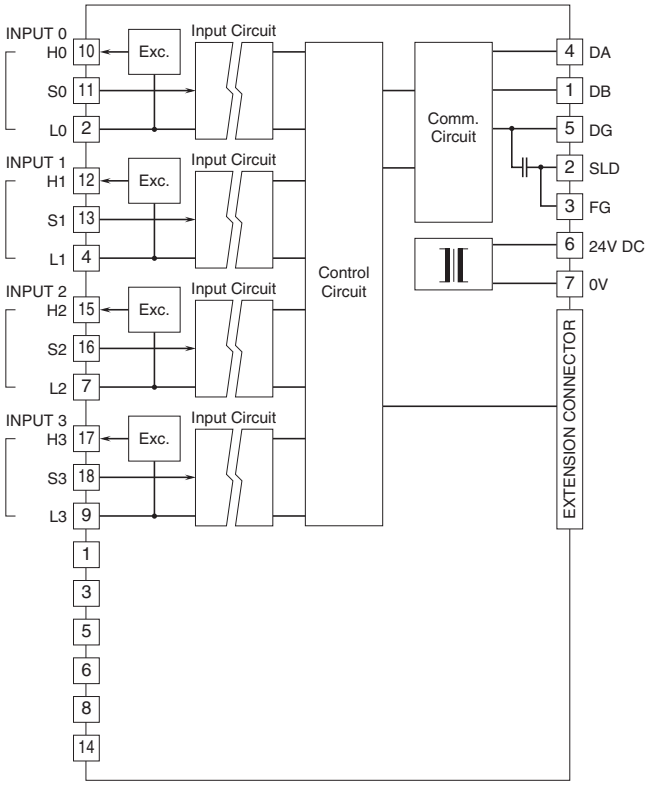

■ **Input Connection Example**

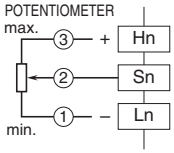

AC CURRENT INPUT MODULE, 4 points

(clamp-on current sensor CLSE use)

MODEL: R7M-CT4E

SPECIFICATIONS

Isolation: Input 0 to input 1 to input 2 to input 3 to Modbus or FG to power input

Converted data range:
Engineering unit value (A) × 100 (Integer)
(Engineering unit value (A) × 1000 (Integer) for CLSE-R5)

Input range (Optional)
CLSE-R5: 0 – 5 A AC
CLSE-05: 0 – 50 A AC
CLSE-10: 0 – 100 A AC
CLSE-20: 0 – 200 A AC
CLSE-40: 0 – 400 A AC
CLSE-60: 0 – 600 A AC

Frequency: 50/60 Hz

Overload capacity: 120 % continuous

Operational range: 5 – 115 % of rating (Operational range for the CLSE-60 is limited up to approx. 109 % (65535).)
(Note: Use for the circuit not exceed 480 V)

Conversion rate / conversion accuracy:
10 msec./±2.0 %, 20 msec./±1.0 %, 40 msec./±0.5 %, 80 msec./±0.5 %
(The conversion accuracy does not include the accuracy of the sensor.)

Response time: ≤ 1.0 sec. (0 – 90 %)

Temperature coefficient: ±0.015 %/°C (±0.008 %/°F)

OPERATING MODE SETTING

(*) Factory setting

• Input Range (SW1-5, 1-6, 1-7, 1-8)

SW1-5	SW1-6	SW1-7	SW1-8	Input range
OFF	OFF	OFF	OFF	CLSE-60 (*)
ON	OFF	OFF	OFF	CLSE-40
OFF	ON	OFF	OFF	CLSE-20
ON	ON	OFF	OFF	CLSE-10
OFF	OFF	ON	OFF	CLSE-05
ON	OFF	ON	OFF	CLSE-R5
ON	ON	ON	ON	PC Configurator setting

• Conversion Rate / Accuracy (SW1-3, 1-4)

SW1-3	SW1-4	Conversion rate / Accuracy
OFF	OFF	80 msec. / ±0.5% (*)
ON	OFF	40 msec. / ±0.5%
OFF	ON	20 msec. / ±1.0%
ON	ON	10 msec. / ±2.0%

• Extension (SW1-1, 1-2)

SW1-1	SW1-2	Extension
OFF	OFF	No extension (*)
ON	OFF	Discrete input, 8 or 16 points
OFF	ON	Discrete output, 8 or 16 points

TERMINAL ASSIGNMENTS

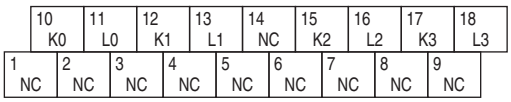

NO.	ID	FUNCTION	NO.	ID	FUNCTION
1	NC	No connection	10	K0	AC current K0
2	NC	No connection	11	L0	AC current L0
3	NC	No connection	12	K1	AC current K1
4	NC	No connection	13	L1	AC current L1
5	NC	No connection	14	NC	No connection
6	NC	No connection	15	K2	AC current K2
7	NC	No connection	16	L2	AC current L2
8	NC	No connection	17	K3	AC current K3
9	NC	No connection	18	L3	AC current L3

CIRCUIT DIAGRAM

Note: In order to improve EMC performance, bond the FG terminal to ground.
Caution: FG terminal is NOT a protective conductor terminal.

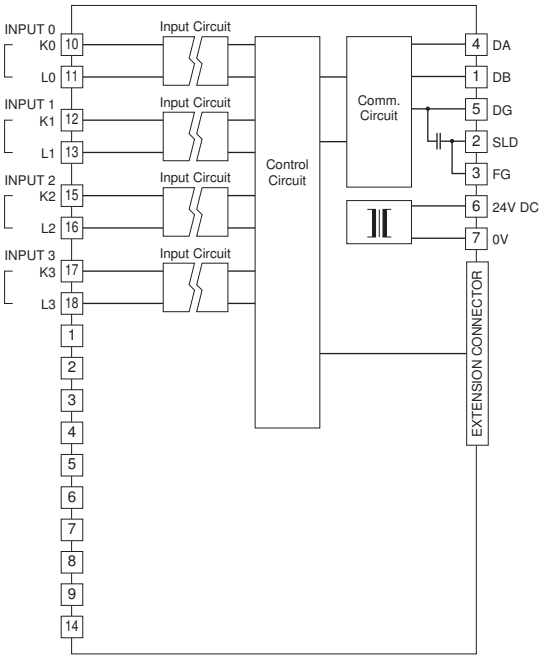

Input Connection Example

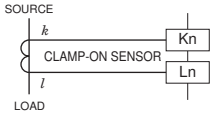

TOTALIZED PULSE INPUT MODULE, 8 points

(115.2 kbps)

MODEL: R7M-PA8

SPECIFICATIONS

Common: Positive or negative common (NPN/PNP) per 8 points
Number of I/O: Input, 8 points
Pulse Input status indicator: LED turns ON with contact ON
Isolation: Input to Modbus or FG to power input
■ **External excitation (PNP, NPN input)**
Sensing voltage: 24 V DC ±10 %; ripple 5 %p-p max
ON voltage / ON current: ≥ 16 V DC (input terminal - Cx) / ≤ 3.7 mA
OFF voltage / OFF current: ≤ 5 V DC (input terminal - Cx) / ≤ 1 mA
Voltage pulse input
ON voltage / ON current: ≥ 16 V DC (input terminal - Cx) / ≤ 3.7 mA
OFF voltage / OFF current: ≤ 5 V DC (input terminal - Cx) / ≤ 1 mA
Input current: ≤ 5.5 mA per point at 24 V DC
Input resistance: Approx. 4.4 kΩ
ON delay: ≤ 2.0 msec.
OFF delay: ≤ 2.0 msec.
Max. Frequency: 100 Hz (This unit is designed to be able to accept a frequency up to 100 Hz, however,'chattering' contact must be avoided for accurate measuring of such high frequency. Use relays that do not cause any chattering.)
Minimum ON/OFF pulse requirements: 5 ms
Accumulated pulse count: 0 - 4 294 967 295
Max. accumulated pulse count: 1 000 - 4 294 967 295 (Factory default: 9 999 999)
Overflow: 0 or 1 (Factory default: 0)

OPERATING MODE SETTING

(*) Factory setting
Caution ! - SW1-3 through 1-8 are unused. Be sure to turn off unused ones.

• Extension (SW1-1, 1-2)

SW1-1	SW1-2	Extension
OFF	OFF	No extension (*)
ON	OFF	Discrete input, 8 or 16 points
OFF	ON	Discrete output, 8 or 16 points

TERMINAL ASSIGNMENTS

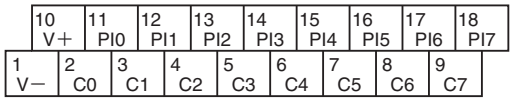

NO.	ID	FUNCTION	NO.	ID	FUNCTION
1	V –	Power (–)	10	V +	Power (+)
2	C0	Common	11	PI0	Input 0
3	C1	Common	12	PI1	Input 1
4	C2	Common	13	PI2	Input 2
5	C3	Common	14	PI3	Input 3
6	C4	Common	15	PI4	Input 4
7	C5	Common	16	PI5	Input 5
8	C6	Common	17	PI6	Input 6
9	C7	Common	18	PI7	Input 7

SIMULTANEOUS USE OF DISCRETE INPUT

In the firmware version V1.00 or later, the module can be simultaneously used as totalized pulse input and discrete input.

CIRCUIT DIAGRAM

Caution: FG terminal is NOT a protective conductor terminal.

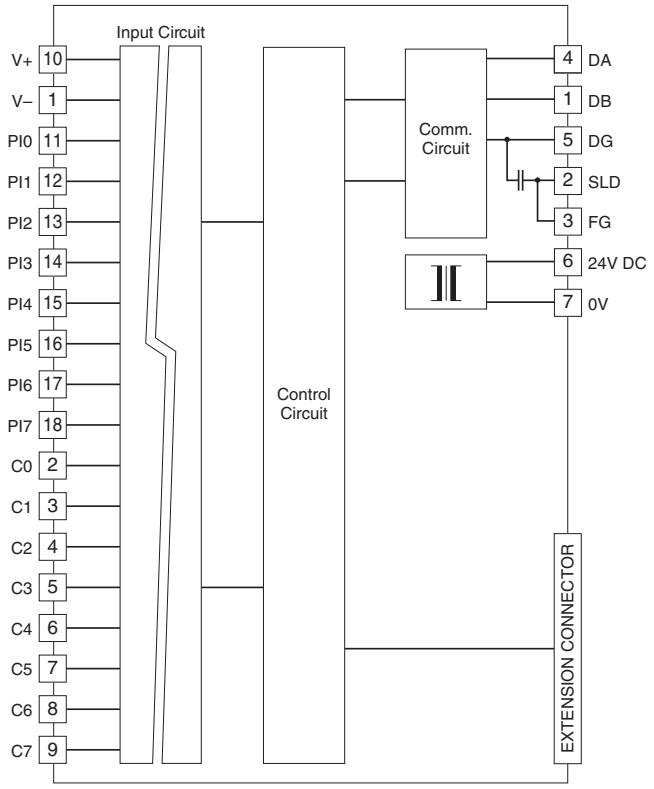

■ **Input Circuit**

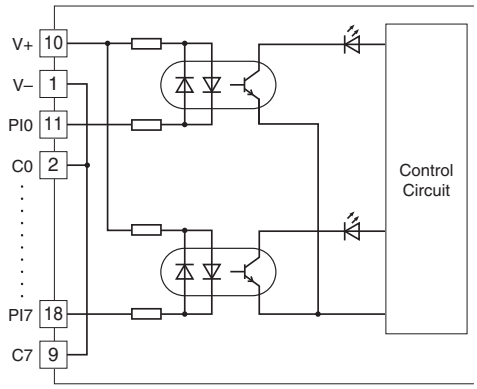

■ **Input Connection Examples**

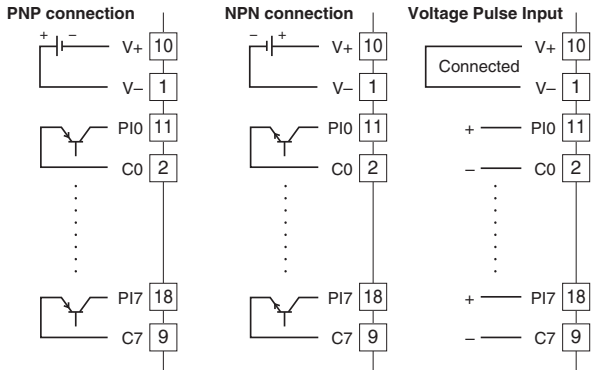

DC VOLTAGE OUTPUT MODULE, 2 points

MODEL: R7M-YV2

SPECIFICATIONS

Isolation: Output 0 to output 1 to Modbus or FG to power input
Converted data range: 0 – 10000 of the output range
Output range
Wide span voltage: -10 – +10 V DC, -5 – +5 V DC, 0 – 10 V DC, 0 – 5 V DC, 1 – 5 V DC
Narrow span voltage: -1 – +1 V DC, 0 – 1 V DC, -0.5 – +0.5 V DC
Operational range: -15 – +115 % of the output range (except -10 – +10 V DC);
approx. -11.5 – +11.5 V DC (-10 – +10 V DC)
Load resistance: ≥ 100 kΩ
Conversion accuracy: ±0.1 %
Response time: 250 msec. (0 – 90 %)
Temperature coefficient: ±0.015 %/°C (±0.008 %/°F)

OPERATING MODE SETTING

(*) Factory setting
Caution ! - SW1-3 is unused. Be sure to turn off unused ones.

• Output Range (SW1-5, 1-6, 1-7, 1-8)

SW1-5	SW1-6	SW1-7	SW1-8	Output range
OFF	OFF	OFF	OFF	-10 – +10 V DC (*)
ON	OFF	OFF	OFF	-5 – +5 V DC
OFF	ON	OFF	OFF	-1 – +1 V DC
ON	ON	OFF	OFF	0 – 10 V DC
OFF	OFF	ON	OFF	0 – 5 V DC
ON	OFF	ON	OFF	1 – 5 V DC
OFF	ON	ON	OFF	0 – 1 V DC
ON	ON	ON	OFF	-0.5 – +0.5 V DC
ON	ON	ON	ON	PC Configurator setting

• Output at the Loss of Communication (SW1-4)

SW1-4	Output at the loss of communication
OFF	Reset the output (to -15% or approx. -11.5V DC)
ON	Hold the output (*) (maintains the last data received normally)

• Extension (SW1-1, 1-2)

SW1-1	SW1-2	Extension
OFF	OFF	No extension (*)
ON	OFF	Discrete input, 8 or 16 points
OFF	ON	Discrete output, 8 or 16 points

TERMINAL ASSIGNMENTS

NO.	ID	FUNCTION	NO.	ID	FUNCTION
1	NC	No connection	6	NC	No connection
2	COM0	Common 0	7	VH0	Wide span volt. 0
3	COM0	Common 0	8	VL0	Narrow span volt. 0
4	COM1	Common 1	9	VH1	Wide span volt. 1
5	COM1	Common 1	10	VL1	Narrow span volt. 1

CIRCUIT DIAGRAM

Note: In order to improve EMC performance, bond the FG terminal to ground.
Caution: FG terminal is NOT a protective conductor terminal.

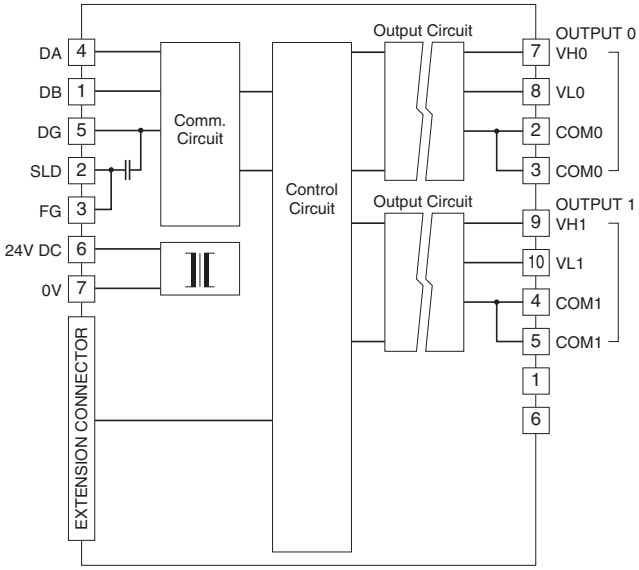

■ **Output Connection Examples**

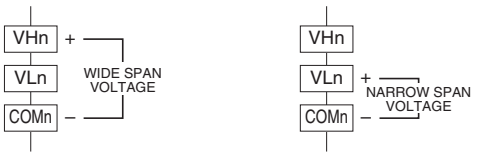

DC CURRENT OUTPUT MODULE, 2 points

MODEL: R7M-YS2

SPECIFICATIONS

Isolation: Output 0 to output 1 to Modbus or FG to power input
Converted data range: 0 – 10000 of the output range
Output range: 4 – 20 mA DC
Load resistance: ≤ 600Ω
Conversion accuracy: ±0.1 %
Response time: 250 msec. (0 – 90 %)
Temperature coefficient: ±0.015 %/°C (±0.008 %/°F)

OPERATING MODE SETTING

(*) Factory setting
Caution ! - SW1-3, 1-5 through 1-8 are unused. Be sure to turn off unused ones.

• Output at the Loss of Communication (SW1-4)

SW1-4	Output at the loss of communication
OFF	Reset the output (to -15%)
ON	Hold the output (*) (maintains the last data received normally)

• Extension (SW1-1, 1-2)

SW1-1	SW1-2	Extension
OFF	OFF	No extension (*)
ON	OFF	Discrete input, 8 or 16 points
OFF	ON	Discrete output, 8 or 16 points

TERMINAL ASSIGNMENTS

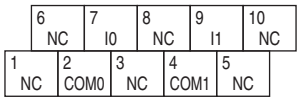

NO.	ID	FUNCTION	NO.	ID	FUNCTION
1	NC	No connection	6	NC	No connection
2	COM0	Common 0	7	I0	Current 0
3	NC	No connection	8	NC	No connection
4	COM1	Common 1	9	I1	Current 1
5	NC	No connection	10	NC	No connection

CIRCUIT DIAGRAM

Note: In order to improve EMC performance, bond the FG terminal to ground.
Caution: FG terminal is NOT a protective conductor terminal.

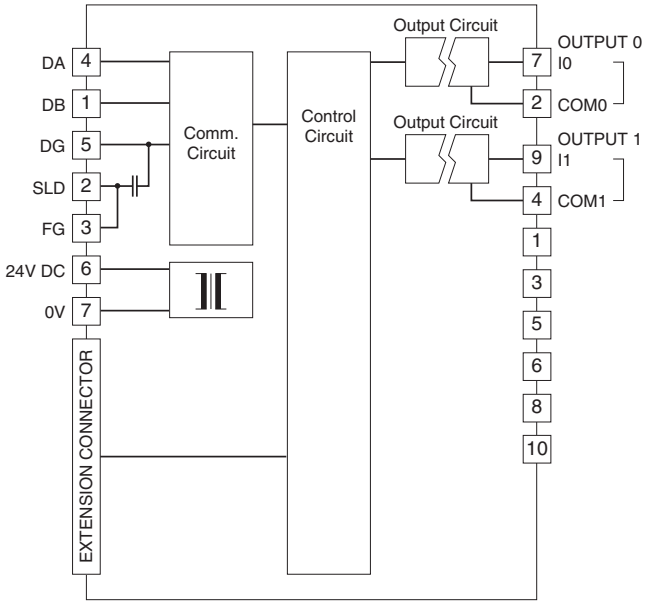

DISCRETE INPUT EXTENSION MODULE, 8 points

MODEL: R7M-EA8

SPECIFICATIONS

Common: Positive or negative common (NPN/PNP) per 8 points
Number of I/O: Input, 8 points
Maximum inputs applicable at once: No limit (at 24 V DC)
Input status indicator: LED turns ON with contact ON
Isolation: Input to internal circuits
Rated input voltage: 24 V DC ±10 %; ripple 5 %p-p max.
ON voltage / current: ≥ 15 V DC (input – COM) / ≥ 3.5 mA
OFF voltage / current: ≤ 5 V DC (input – COM) / ≤ 1 mA
Input current: ≤ 5.5 mA per point at 24 V DC
Input resistance: Approx. 4.4 kΩ
ON delay: ≤ 2.0 msec.
OFF delay: ≤ 2.0 msec.

TERMINAL ASSIGNMENTS

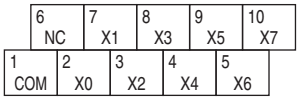

NO.	ID	FUNCTION	NO.	ID	FUNCTION
1	COM	Common	6	NC	No Connection
2	X0	Input 0	7	X1	Input 1
3	X2	Input 2	8	X3	Input 3
4	X4	Input 4	9	X5	Input 5
5	X6	Input 6	10	X7	Input 7

CIRCUIT DIAGRAM

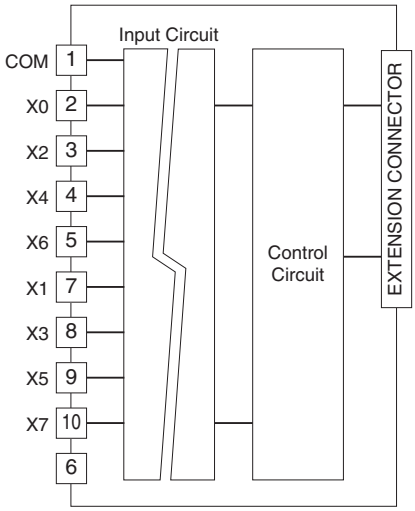

■ **Input Circuit**

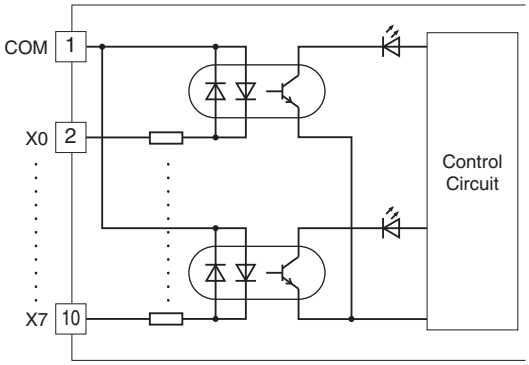

■ **Input Connection Examples**

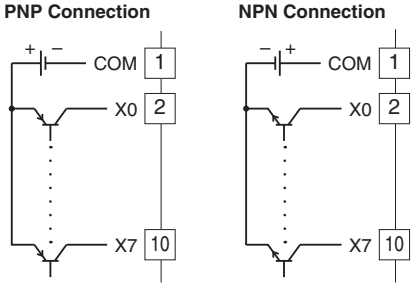

DISCRETE INPUT EXTENSION MODULE, 16 points

MODEL: R7M-EA16

SPECIFICATIONS

Common: Positive or negative common (NPN/PNP) per 16 points
Number of I/O: Input, 16 points
Maximum inputs applicable at once: No limit (at 24 V DC)
Input status indicator: LED turns ON with contact ON
Isolation: Input to internal circuits
Rated input voltage: 24 V DC ±10 %; ripple 5 %p-p max.
ON voltage / current: ≥ 15 V DC (input – COM) / ≥ 3.5 mA
OFF voltage / current: ≤ 5 V DC (input – COM) / ≤ 1 mA
Input current: ≤ 5.5 mA per point at 24 V DC
Input resistance: Approx. 4.4 kΩ
ON delay: ≤ 2.0 msec.
OFF delay: ≤ 2.0 msec.

TERMINAL ASSIGNMENTS

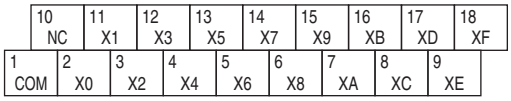

NO.	ID	FUNCTION	NO.	ID	FUNCTION
1	COM	Common	10	NC	No Connection
2	X0	Input 0	11	X1	Input 1
3	X2	Input 2	12	X3	Input 3
4	X4	Input 4	13	X5	Input 5
5	X6	Input 6	14	X7	Input 7
6	X8	Input 8	15	X9	Input 9
7	XA	Input 10	16	XB	Input 11
8	XC	Input 12	17	XD	Input 13
9	XE	Input 14	18	XF	Input 15

CIRCUIT DIAGRAM

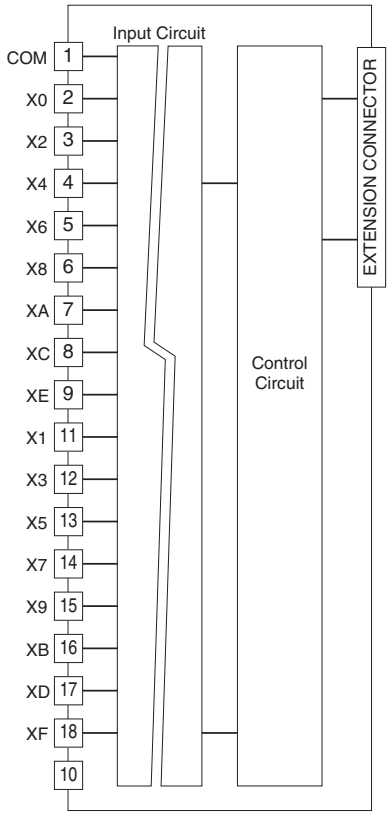

■ **Input Circuit**

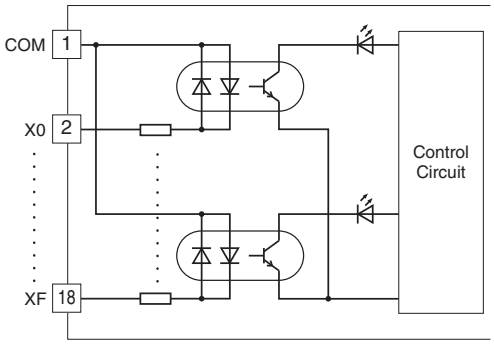

■ **Input Connection Examples**

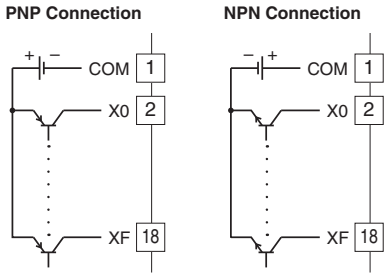

NPN TRANSISTOR OUTPUT EXTENSION MODULE, 8 points

MODEL: R7M-EC8A

SPECIFICATIONS

Common: Negative common (NPN) per 8 points
Number of I/O: Output, 8 points
Maximum outputs applicable at once: No limit (at 24 V DC)
Output status indicator: LED turns ON with contact ON
Isolation: Output to internal circuits
Rated load voltage: 24 V DC ±10 %
Rated output current: 0.25 A per point, 2.0 A per common
Residual voltage: ≤ 1.2 V
Leakage current: ≤ 0.1 mA
ON delay: ≤ 0.5 msec.
OFF delay: ≤ 1.5 msec.
(When driving an inductive load, connect a diode in parallel with the load.)

TERMINAL ASSIGNMENTS

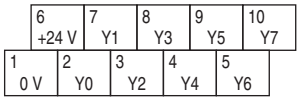

NO.	ID	FUNCTION	NO.	ID	FUNCTION
1	0 V	0 V (common)	6	+24 V	24 V DC
2	Y0	Output 0	7	Y1	Output 1
3	Y2	Output 2	8	Y3	Output 3
4	Y4	Output 4	9	Y5	Output 5
5	Y6	Output 6	10	Y7	Output 7

CIRCUIT DIAGRAM

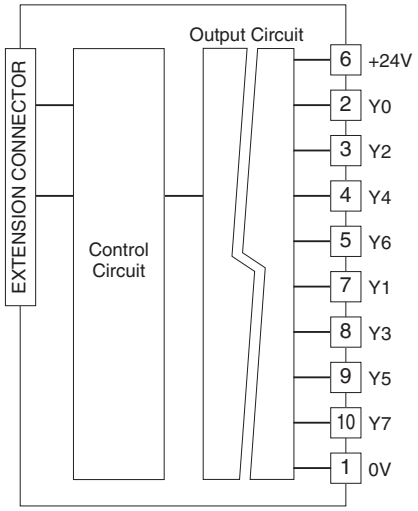

■ **Output Circuit**

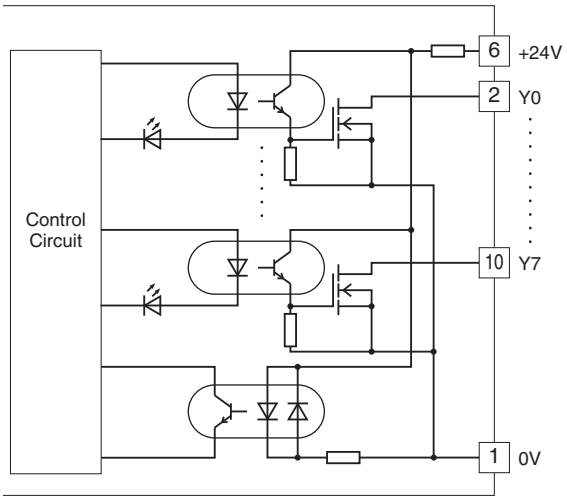

■ **Output Connection Example**

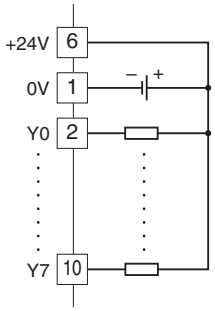

NPN TRANSISTOR OUTPUT EXTENSION MODULE, 16 points

MODEL: R7M-EC16A

SPECIFICATIONS

Common: Negative common (NPN) per 16 points
Number of I/O: Output, 16 points
Maximum outputs applicable at once: No limit (at 24 V DC)
Output status indicator: LED turns ON with contact ON
Isolation: Output to internal circuits
Rated load voltage: 24 V DC ±10 %
Rated output current: 0.25 A per point, 2.0 A per common
Residual voltage: ≤ 1.2 V
Leakage current: ≤ 0.1 mA
ON delay: ≤ 0.5 msec.
OFF delay: ≤ 1.5 msec.
(When driving an inductive load, connect a diode in parallel with the load.)

TERMINAL ASSIGNMENTS

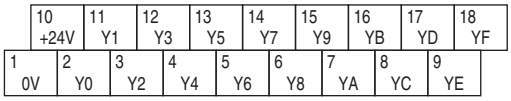

NO.	ID	FUNCTION	NO.	ID	FUNCTION
1	0 V	0 V (common)	10	+24 V	24 V DC
2	Y0	Output 0	11	Y1	Output 1
3	Y2	Output 2	12	Y3	Output 3
4	Y4	Output 4	13	Y5	Output 5
5	Y6	Output 6	14	Y7	Output 7
6	Y8	Output 8	15	Y9	Output 9
7	YA	Output 10	16	YB	Output 11
8	YC	Output 12	17	YD	Output 13
9	YE	Output 14	18	YF	Output 15

CIRCUIT DIAGRAM

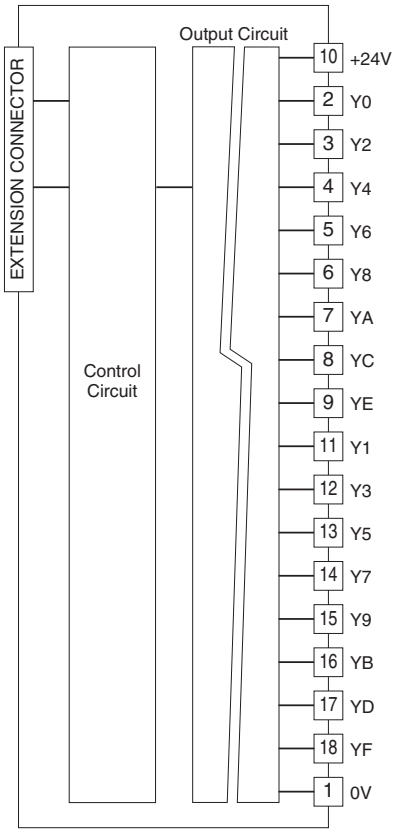

■ **Output Circuit**

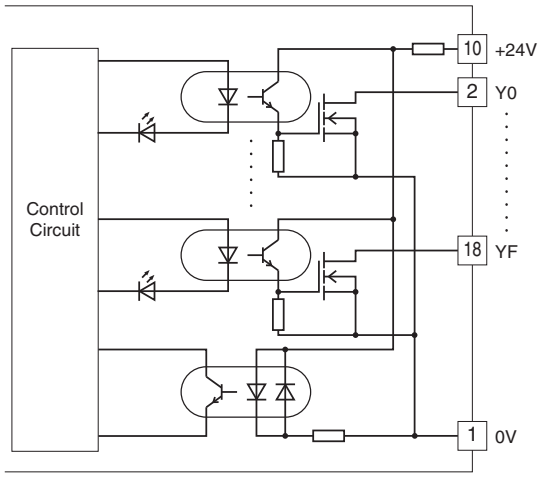

■ **Output Connection Example**

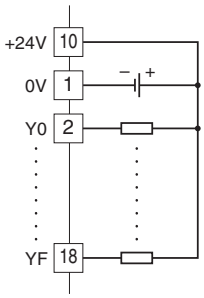

PNP TRANSISTOR OUTPUT EXTENSION MODULE, 8 points

MODEL: R7M-EC8B

SPECIFICATIONS

Common: Positive common (PNP) per 8 points
Number of I/O: Output, 8 points
Maximum outputs applicable at once: No limit (at 24 V DC)
Output status indicator: LED turns ON with contact ON
Isolation: Output to internal circuits
Rated load voltage: 24 V DC ±10 %
Rated output current: 0.25 A per point, 2.0 A per common
Residual voltage: ≤ 1.2 V
Leakage current: ≤ 0.1 mA
ON delay: ≤ 0.5 msec.
OFF delay: ≤ 1.5 msec.
(When driving an inductive load, connect a diode in parallel with the load.)

TERMINAL ASSIGNMENTS

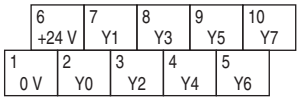

NO.	ID	FUNCTION	NO.	ID	FUNCTION
1	0 V	0 V	6	+24 V	24 V DC (common)
2	Y0	Output 0	7	Y1	Output 1
3	Y2	Output 2	8	Y3	Output 3
4	Y4	Output 4	9	Y5	Output 5
5	Y6	Output 6	10	Y7	Output 7

CIRCUIT DIAGRAM

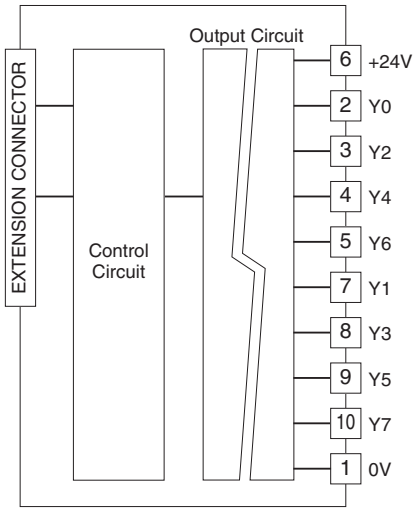

■ **Output Circuit**

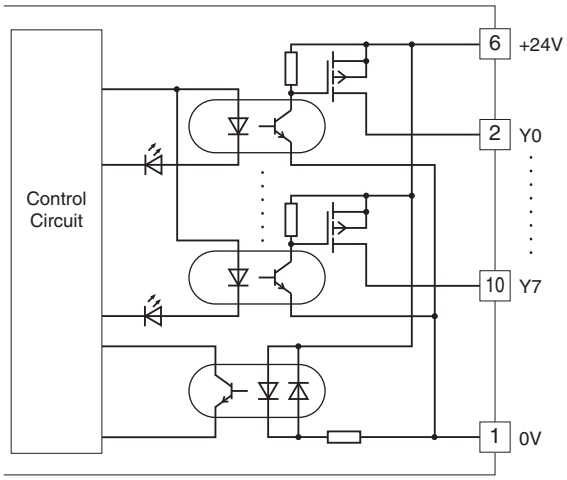

■ **Output Connection Example**

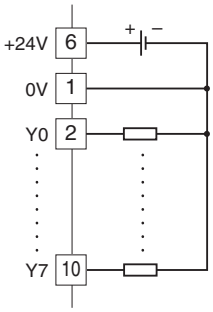

PNP TRANSISTOR OUTPUT EXTENSION MODULE, 16 points

MODEL: R7M-EC16B

SPECIFICATIONS

Common: Positive common (PNP) per 16 points
Number of I/O: Output, 16 points
Maximum outputs applicable at once: No limit (at 24 V DC)
Output status indicator: LED turns ON with contact ON
Isolation: Output to internal circuits
Rated load voltage: 24 V DC ±10 %
Rated output current: 0.25 A per point, 2.0 A per common
Residual voltage: ≤ 1.2 V
Leakage current: ≤ 0.1 mA
ON delay: ≤ 0.5 msec.
OFF delay: ≤ 1.5 msec.
(When driving an inductive load, connect a diode in parallel with the load.)

TERMINAL ASSIGNMENTS

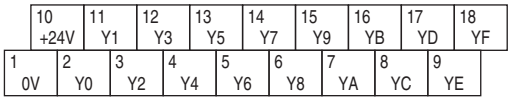

NO.	ID	FUNCTION	NO.	ID	FUNCTION
1	0 V	0 V	10	+24 V	24 V DC (common)
2	Y0	Output 0	11	Y1	Output 1
3	Y2	Output 2	12	Y3	Output 3
4	Y4	Output 4	13	Y5	Output 5
5	Y6	Output 6	14	Y7	Output 7
6	Y8	Output 8	15	Y9	Output 9
7	YA	Output 10	16	YB	Output 11
8	YC	Output 12	17	YD	Output 13
9	YE	Output 14	18	YF	Output 15

CIRCUIT DIAGRAM

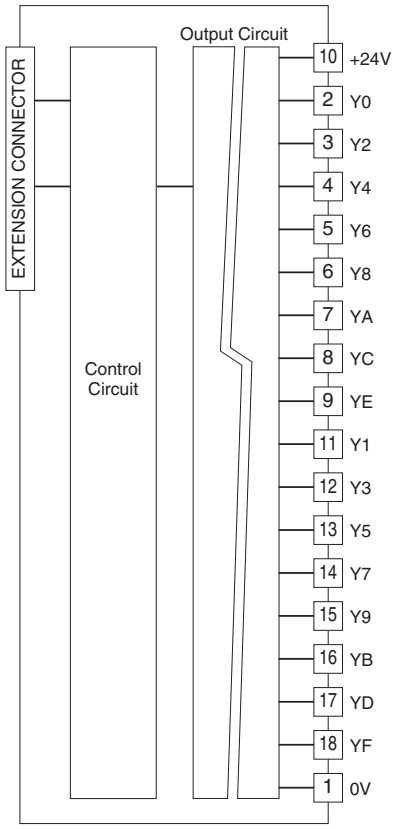

■ **Output Circuit**

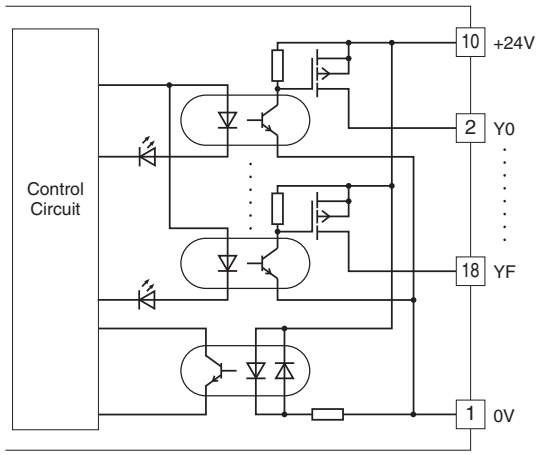

■ **Output Connection Example**

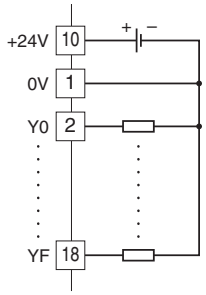

RELAY CONTACT OUTPUT EXTENSION MODULE

MODEL: R7M-EC8C

SPECIFICATIONS

Common: 1 common per 4 points (4 terminals)
Common current: Max. 8 A (4 terminals)
Number of I/O: Relay contact output, 8 points
Maximum outputs applicable at once: No limit (at 24 V DC)
Output status indicator: LED turns ON with contact ON
Isolation: Output to internal circuits
Relay driving power: 24 V DC ±10 %, ≥ 60 mA
Rated load: 250 V AC @ 2 A (cos φ = 1)
30 V DC @ 2 A (resistive load)
Maximum switching voltage: 250 V AC or 30 V DC
Maximum switching power: 500 VA or 60 W
Minimum load: 24 V DC @5 mA
Mechanical life: 2×10^7 cycles (rate 300/min.)
When driving an inductive load, external contact protection and noise quenching are recommended.
ON delay: ≤ 10 msec.
OFF delay: ≤ 10 msec.

TERMINAL ASSIGNMENTS

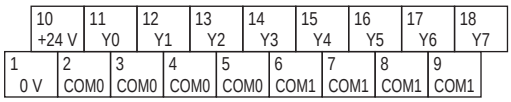

NO.	ID	FUNCTION	NO.	ID	FUNCTION
1	0 V	0 V	10	+24 V	24 V DC
2	COM0	Common 0	11	Y0	Output 0
3	COM0	Common 0	12	Y1	Output 1
4	COM0	Common 0	13	Y2	Output 2
5	COM0	Common 0	14	Y3	Output 3
6	COM1	Common 1	15	Y4	Output 4
7	COM1	Common 1	16	Y5	Output 5
8	COM1	Common 1	17	Y6	Output 6
9	COM1	Common 1	18	Y7	Output 7

CIRCUIT DIAGRAM

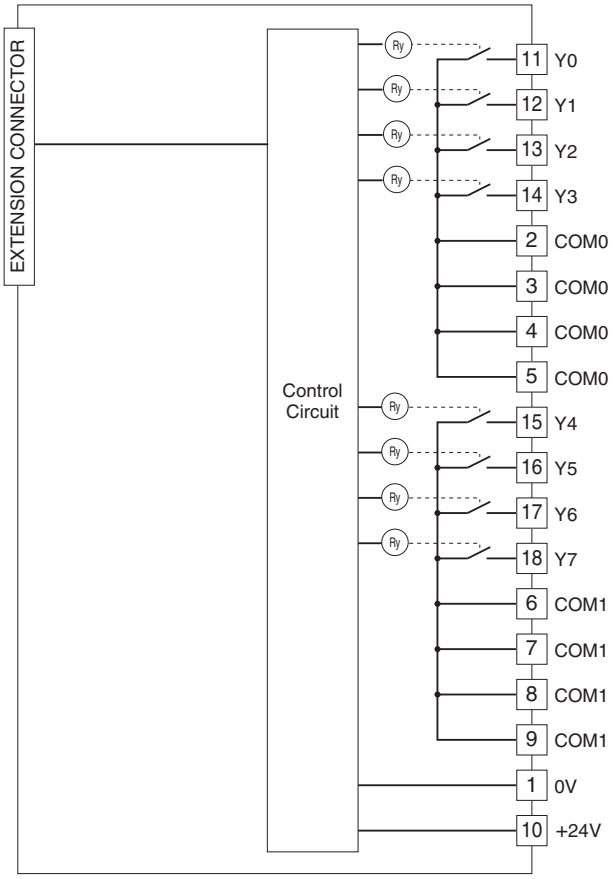

■ **Output Connection Example**

4 points / common

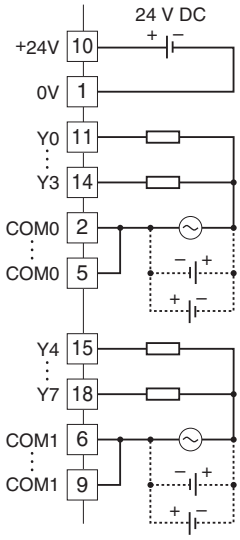

8 points / common

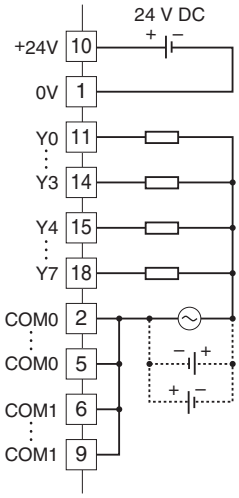

⚠ Specifications are subject to change without notice.