## Remote I/O R7 Series

## FLEX NETWORK I/O MODULE

(8 points relay output)

Functions & Features

• 8 points relay output module for FLEX NETWORK

FLEX NETWORK is registered trademark of Digital Electronics Corporation in Japan.

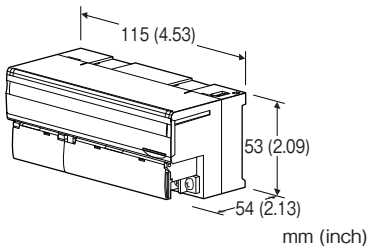


## MODEL:R7FN-DC8C-R[1]

## ORDERING INFORMATION

• Code number: R7FN-DC8C-R[1]

Specify a code from below for [1].

(e.g. R7FN-DC8C-R/Q)

• Specify the specification for option code /Q

(e.g. /C01/SET)

## I/O TYPE

DC8C: Relay contact output, 8 points

## POWER INPUT

**DC Power**

R: 24 V DC

(Operational voltage range 24 V ±10 %, ripple 10 %p-p max.)

## [1] OPTIONS

blank: none

/Q: Options other than the above (specify the specification)

**SPECIFICATIONS OF OPTION: Q (multiple selections)**

**COATING (For the detail, refer to M-System's web site.)**

/C01: Silicone coating

/C02: Polyurethane coating

/C03: Rubber coating

**EX-FACTORY SETTING**

/SET: Preset according to the Ordering Information Sheet (No. ESU-7808-DC16)

## GENERAL SPECIFICATIONS

Connection: M3 separable screw terminal (torque 0.5 N·m)

Solderless terminal: Refer to the drawing at the end of the section.

• Communication cable

Recommended manufacture: Japan Solderless Terminal MFG.Co.Ltd

Applicable wire size: 0.2 to 0.5 $mm^2$ (AWG 26 to 22)

• Others

Recommended manufacture: Japan solderless terminal MFG.Co.Ltd, Nichifu Co.,ltd

Applicable wire size: 0.25 to 1.65 $mm^2$ (AWG 22 to 16)

Screw terminal: Nickel-plated steel

Housing material: Flame-resistant resin (gray)

Isolation: Output to FLEX NETWORK to power to FG

Output at the loss of communication:

Output hold (*), Output clear

Selectable with the front DIP SW

(*) factory default setting

Status indicator LED: PWR, RUN

(Refer to the instruction manual)

Discrete output status indicator LED: LED turns on with output ON

**■Recommended solderless terminal**

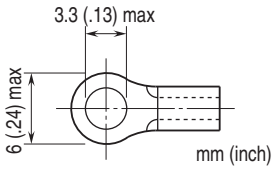


## FLEX NETWORK COMMUNICATION

Communication configuration: 1: N

Connection method: Multi-drop Connection

Communication method: Cyclic Time Division, half-duplex

Communication I/F: Differential, pulse transfer isolation

Error Check: Format, bit, CRC-12 verification

Max. Number of Nodes: 63 (1008 I/O points)

Required node: 1

Network cable: Pro-face's following cable

FN-CABLE2010-31-MS (10 m)

FN-CABLE2050-31-MS (50 m)

FN-CABLE2200-31-MS (200 m)

Transmission distance: 12 Mbps: 100 meters (328 ft) (*)

6 Mbps: 200 meters (656 ft)

(*) Factory default setting

Station address: Rotary switch

(Refer to the instruction manual)

Terminating resistor: Built-in

## OUTPUT SPECIFICATIONS

**Common**: 1 common per 4 points (4 points)
**Maximum load current**: 1.0 A per point
**Common current**: Max. 4 A (4 terminals)
**Maximum outputs applicable at once**: No limit (at 24 V DC)
**Output supply voltage/current**: 24 V DC ±10 %/ ≥ 60 mA
**Rated load**: 250 V AC @ 2A, 30 V DC @ 2A
(Use as Measurement Category I or less than 125 V AC to conform with EU Directive)
**Maximum switching voltage**: 250 V AC, 30 V DC
**Maximum switching power**: 500 VA (AC), 60 W (DC)
**Minimum applicable load**: 24 V DC @ 5 mA
Mechanical life: $2 \times 10^7$ cycles (300 cycles per min.)
When driving an inductive load, external contact protection and noise quenching recommended.
**ON delay time**: ≤ 10 msec.
**OFF delay time**: ≤ 10 msec.

## INSTALLATION

**Current consumption**
• **DC**: Applox 50 mA
• **Relay driving current**: Applox. 60 mA
**Operating temperature**: -10 to +55°C (14 to 131°F)
**Storage temperature**: -20 to +65°C (-4 to +149°F)
**Operating humidity**: 30 to 90 %RH (non-condensing)
**Atmosphere**: No corrosive gas or heavy dust
**Mounting**: DIN rail (35 mm rail)
**Weight**: 200 g (0.44 lb)

## PERFORMANCE

**Insulation resistance**: ≥ 100 MΩ with 500 V DC
**Dielectric strength**: 1500 V AC @ 1 minute (output to FLEX NETWORK to power to FG)

## STANDARDS & APPROVALS

**EU conformity**:
EMC Directive
EMI EN 61000-6-4
EMS EN 61000-6-2
Low Voltage Directive
EN 61010-1, EN 61010-2-201
Measurement Category II (output)
Pollution Degree 2
Output to power: Basic insulation (150 V)
RoHS Directive

## EXTERNAL VIEW

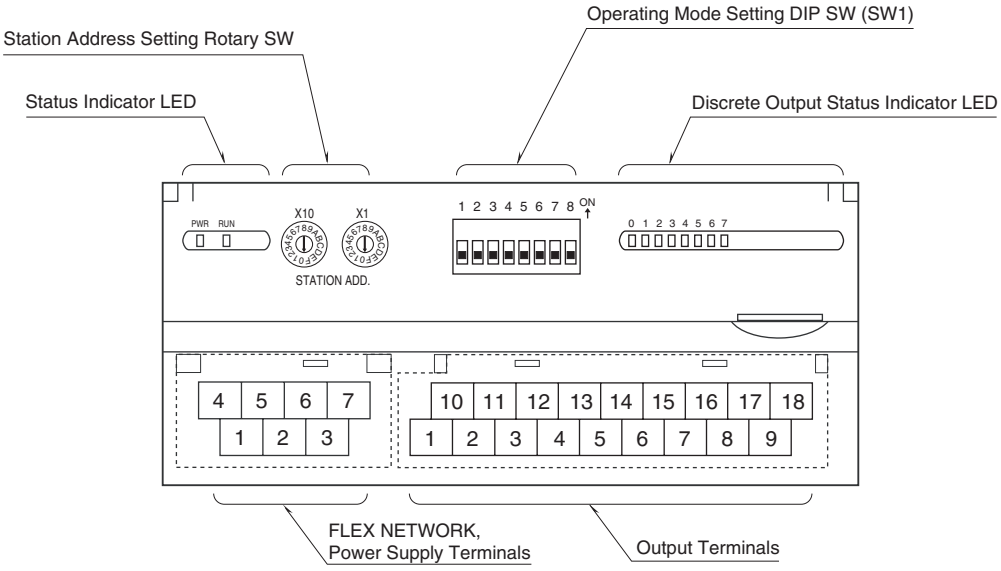


## CONNECTION DIAGRAMS

### ■ MASTER CONNECTION

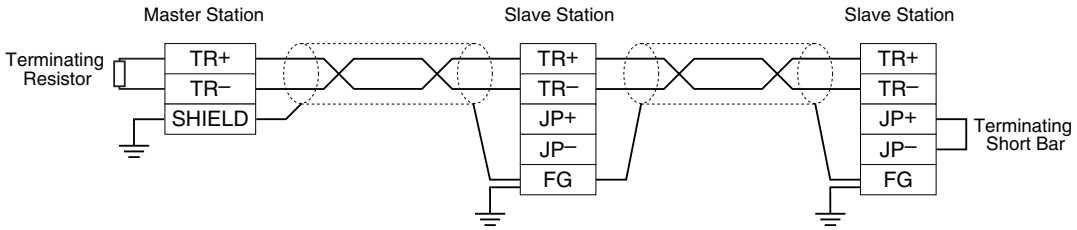


Note: Be sure to use the terminator(s) located at both ends of the modules.

## TERMINAL ASSIGNMENTS

### ■OUTPUT TERMINAL ASSIGNMENT

| 10 | 11 | 12 | 13 | 14 | 15 | 16 | 17 | 18 |
|---|---|---|---|---|---|---|---|---|
| +24 V | Y0 | Y1 | Y2 | Y3 | Y4 | Y5 | Y6 | Y7 |

| 1 | 2 | 3 | 4 | 5 | 6 | 7 | 8 | 9 |
|---|---|---|---|---|---|---|---|---|
| 0 V | COM0 | COM0 | COM0 | COM0 | COM1 | COM1 | COM1 | COM1 |

| NO. | ID | FUNCTION | NO. | ID | FUNCTION |
|---|---|---|---|---|---|
| 1 | 0 V | 0 V | 10 | +24 V | 24 V DC |
| 2 | COM0 | Common 0 | 11 | Y0 | Output 0 |
| 3 | COM0 | Common 0 | 12 | Y1 | Output 1 |
| 4 | COM0 | Common 0 | 13 | Y2 | Output 2 |
| 5 | COM0 | Common 0 | 14 | Y3 | Output 3 |
| 6 | COM1 | Common 1 | 15 | Y4 | Output 4 |
| 7 | COM1 | Common 1 | 16 | Y5 | Output 5 |
| 8 | COM1 | Common 1 | 17 | Y6 | Output 6 |
| 9 | COM1 | Common 1 | 18 | Y7 | Output 7 |

■ **NETWORK, POWER SUPPLY TERMINAL ASSIGNMENT**

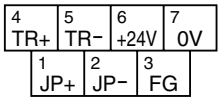


| NO. | ID | FUNCTION, NOTES |
|---|---|---|
| 1 | JP+ | Terminating resistor |
| 2 | JP– | Terminating resistor |
| 3 | FG | FG |
| 4 | TR+ | Network |
| 5 | TR– | Network |
| 6 | +24V | Power input (24V DC) |
| 7 | 0V | Power input (0V) |

## I/O DATA DESCRIPTIONS

■ **RELAY CONTACT OUTPUT**

**• Di**

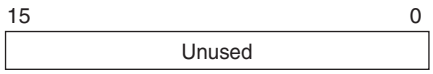


0: OFF
1: ON

**• Do**

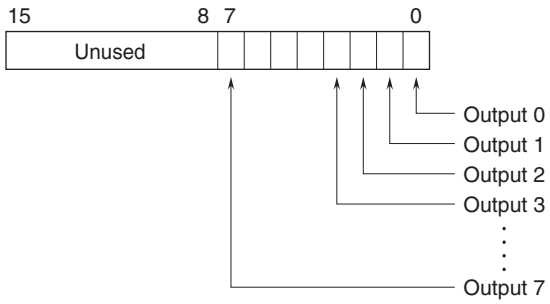


## EXTERNAL DIMENSIONS & TERMINAL ASSIGNMENTS unit: mm [inch]

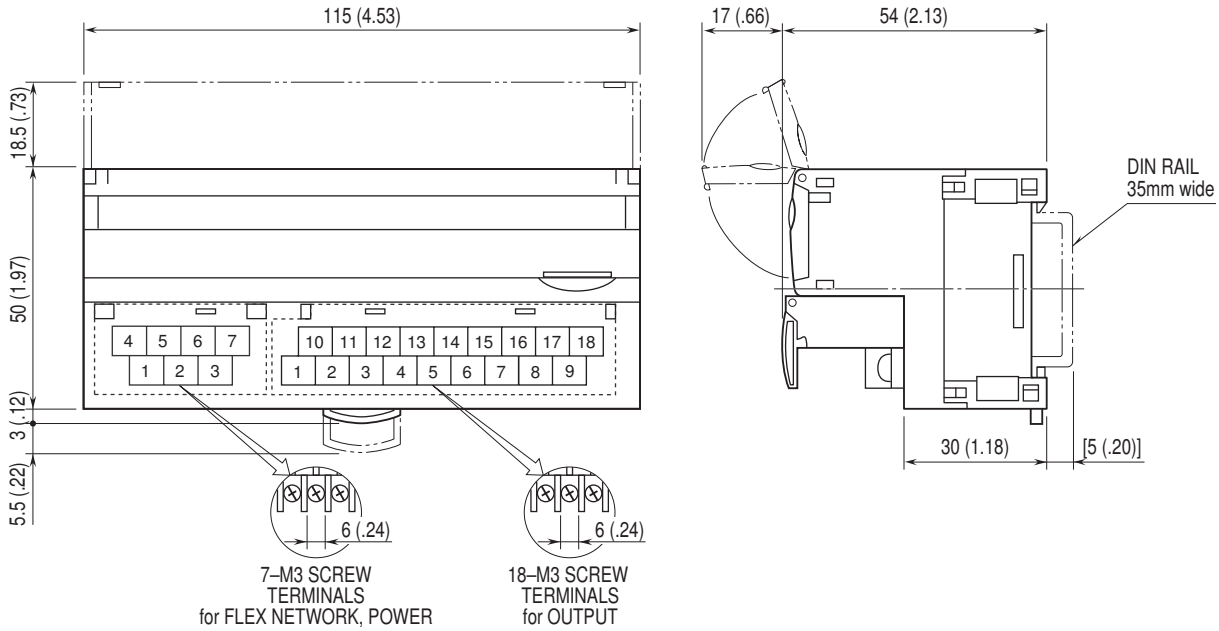

## SCHEMATIC CIRCUITRY & CONNECTION DIAGRAM

Note: In order to improve EMC performance, bond the FG terminal to ground.
Caution: FG terminal is NOT a protective conductor terminal.

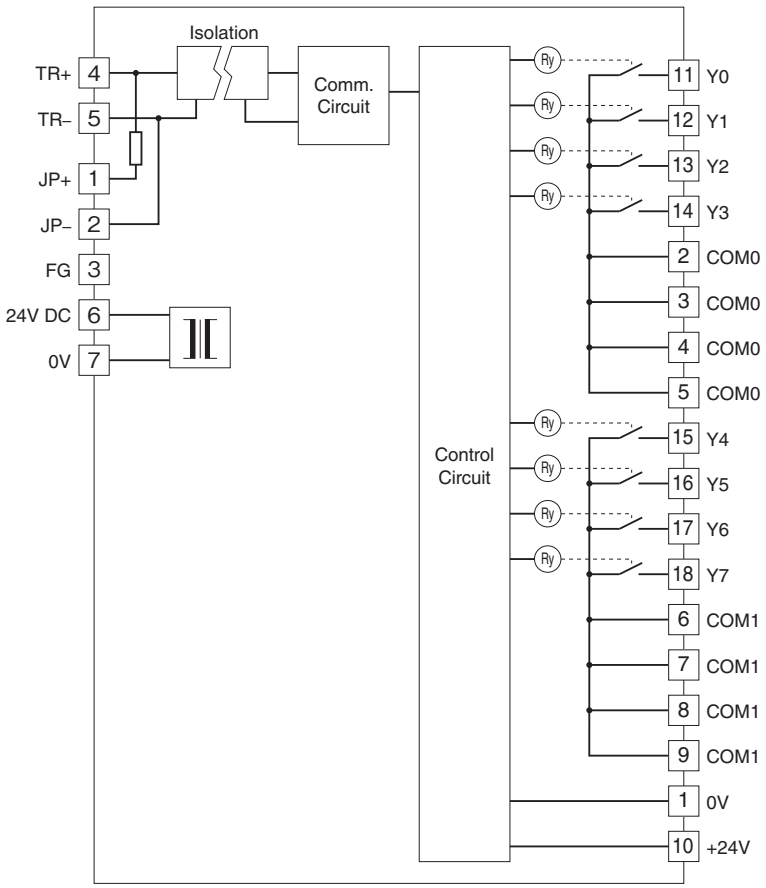


■ **Output Connection Example**

4 points / common

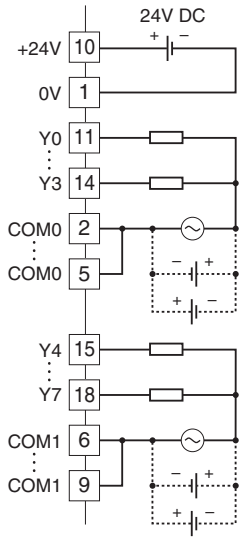


8 points / common

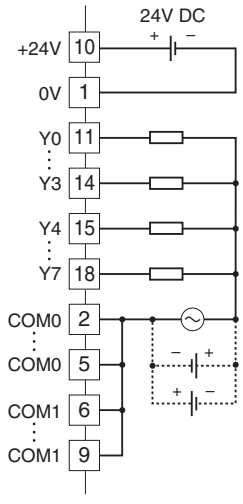


⚠ Specifications are subject to change without notice.