HAMAMATSU

13 mm Dia. SIDE-ON COMPACT TYPE PHOTOMULTIPLIER TUBE SERIES

13 mm (1/2 Inch) Diameter, 9-stage, Side-on Type

The R6350 to R6358 series are compact side-on photomultiplier tubes with a 13 mm diameter and 50 mm height. Using different photocathode and window material combinations helped to produce a full product lineup to cover a wide spectral response range from the UV to the near infrared. This allows selecting the optimal tube to match your application and wavelength to be detected, the same as when selecting the popular 28 mm (1-1/8 inch) side-on tubes.

The R6356-06 and R6357 do not use an entrance mesh (grill) which is usually installed just inside the light input window. This eliminates the light loss caused by the entrance mesh, even if the size of incident light beam is small.

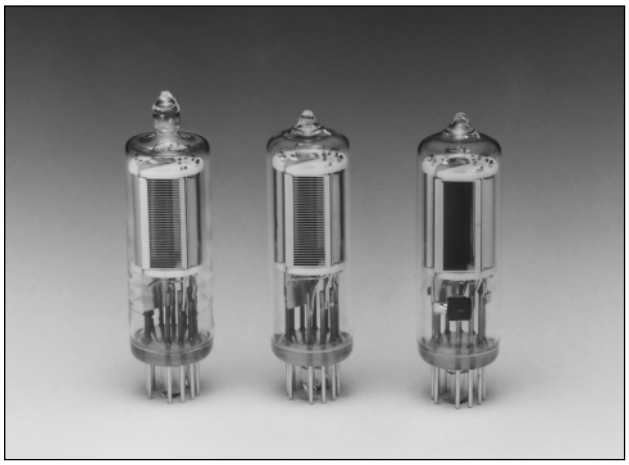

▲ Left: Fused silica window Center: UV window
Right: Meshless type (R6356-06, R6357)

APPLICATIONS

- **Emission Spectroscopy (ICP, Direct Reader)**
- **Environmental Monitoring (NOx, SO_2, etc.)**
- **Fluorescence Immunoassay**
- **Chemiluminescence Immunoassay**
- **Hygiene Monitor (Bio Luminescence)**
- **X-ray Phototimer**
- **Fluorometer**
- **Microscope (Laser Scanning Microscope)**

Subject to local technical requirements and regulations, availability of products included in this promotional material may vary. Please consult with our sales office.
Information furnished by HAMAMATSU is believed to be reliable. However, no responsibility is assumed for possible inaccuracies or omissions. Specifications are subject to change without notice. No patent rights are granted to any of the circuits described herein. ©2005 Hamamatsu Photonics K.K.

Side-On Compact Type Photomultiplier Tubes

Type No.	Remarks	Spectral Response		Ⓐ	Ⓑ	Ⓒ	Ⓓ	Socket	Maximum Ⓕ Ratings		Cathode Sensitivity Luminous	
		Range (nm)	Peak Wave-length (nm)	Photo-cathode Material	Window Material	Outline No.	Dynode Structure / No. of Stages	Socket Assembly	Anode to Cathode Voltage (V)	Ⓖ Average Anode Current (mA)	Min. (μA/lm)	Typ. (μA/lm)
R6350	For UV to visible range, general purpose.	185 to 650	340	Sb-Cs	U	①	CC/9	E678-11U/Ⓔ	1250	0.01	20	40
R6351	Synthetic silica window type of R6350	160 to 650	340	Sb-Cs	Q	②	CC/9	E678-11U/Ⓔ	1250	0.01	20	40
R6352	High sensitivity variant of R6350	185 to 750	420	BA	U	①	CC/9	E678-11U/Ⓔ	1250	0.01	80	120
R6353	Low dark current bialkali photocathode	185 to 680	400	LBA	U	①	CC/9	E678-11U/Ⓔ	1250	0.01	30	70
R6354	For UV range	160 to 320	230	Cs-Te	Q	②	CC/9	E678-11U/Ⓔ	1250	0.01	—	—
R6355	For UV to near IR range, general purpose	185 to 850	530	MA	U	①	CC/9	E678-11U/Ⓔ	1250	0.01	80	150
R6356-06 *	High sensitivity variant of R6355 Meshless type	185 to 900	400	MA	U	①	CC/9	E678-11U/Ⓔ	1250	0.01	200	300
R6357 *	High sensitivity variant of R6356-06, Meshless type	185 to 900	450	MA	U	①	CC/9	E678-11U/Ⓔ	1250	0.01	350	500
R6358	Low dark current multialkali photocathode	185 to 830	530	LMA	U	①	CC/9	E678-11U/Ⓔ	1250	0.01	140	200

* Achieved the higher photocathode sensitivity by eliminating the mesh in front of the photocathode.
It also features no output variation, disturbed by the mesh, when the incident light spot to the photocathode is small.

NOTE: Ⓐ Photocathode materials
BA: Bialkali
LBA: Low dark current bialkali
MA: Multialkali
LMA: Low dark current multialkali

Ⓑ Window materials
Q: Fused silica
U: UV glass

Ⓒ Outline No.
See Fig. 9

Ⓓ Dynode structure
CC: Circular-cage

Ⓔ See optional accessories

Ⓕ The maximum operating ambient temperature range is -30 °C to +50 °C.

Ⓖ Averaged over any interval of 30 seconds maximum.

Cathode Sensitivity			Ⓚ Anode to Cathode Supply Voltage (V)	Anode Characteristics Ⓛ								Notes	Type No.
				Anode Sensitivity				Anode Dark Current (After 30 min.)		Time Response			
Blue Sens. Index (CS 5-58) Typ.	Ⓗ Red/ White Ratio Typ.	Ⓙ Radiant Typ. (mA/W)		Luminous		Ⓙ Radiant Typ. (A/W)	Gain Typ.			Rise Time Typ. (ns)	Electron Transit Time Typ. (ns)		
				Min. (A/lm)	Typ. (A/lm)			Typ. (nA)	Max. (nA)				
5	—	48	1000	50	300	3.6×10^5	7.5×10^6	0.5	5	1.4	15	Photon counting type: R6350P Dark Count 30 s^{-1} Max.	R6350
5	—	48	1000	50	300	3.6×10^5	7.5×10^6	0.5	5	1.4	15		R6351
10	—	90	1000	100	700	5.2×10^5	5.8×10^6	1	10	1.4	15		R6352
6.5	—	65	1000	100	400	3.7×10^5	5.7×10^6	0.1	2	1.4	15	Photon counting type: R6353P Dark Count 30 s^{-1} Max.	R6353
—	—	62 Ⓜ	1000	—	—	1.8×10^5 Ⓜ	3×10^6	0.5	5	1.4	15		R6354
6	0.15	45	1000	100	600	1.8×10^5	4×10^6	1	10	1.4	15		R6355
10	0.3	77	1000	400	2000	5.2×10^5	6.7×10^6	1	10	1.4	15		R6356-06 *
13	0.4	105	1000	1000	2000	4.2×10^5	4×10^6	2	10	1.4	15		R6357 *
7.5	0.15	70	1000	300	700	2.5×10^5	3.5×10^6	0.1	1	1.4	15	Photon counting type: R6358-10 Dark Count 300 s^{-1} Max.	R6358

Ⓗ Measured using red filter Toshiba R-68.

Ⓙ Measured at the peak wavelength.

Ⓚ Refer to Note Ⓝ.

Ⓛ Anode characteristics are measured with the supply voltage and voltage distribution ratio specified by Note Ⓝ.

Ⓜ: at 254 nm

Ⓝ Voltage distribution ratio and voltage.

Electrodes	K	Dy1	Dy2	Dy3	Dy4	Dy5	Dy6	Dy7	Dy8	Dy9	P
Distribution Ratio	1	1	1	1	1	1	1	1	1	1	

Supply Voltage: 1000 V, K: Cathode, Dy: Dynode, P: Anode

Figure 1: Typical Spectral Response of Cs-Te

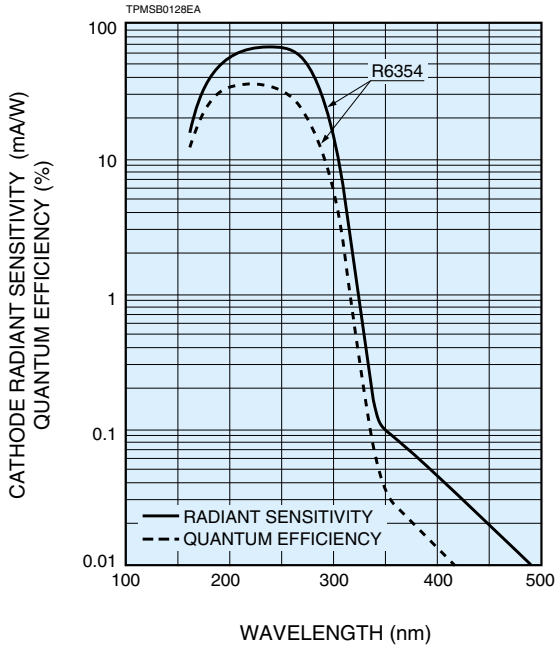

Figure 2: Typical Spectral Response of BA, LBA, Sb-Cs

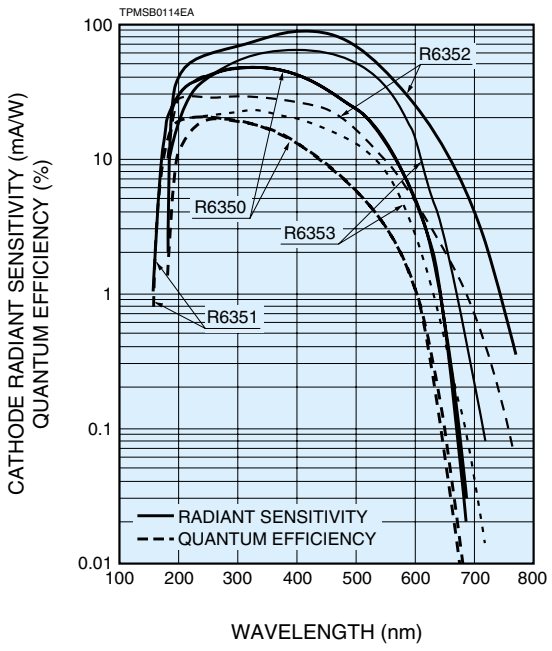

Figure 3: Typical Spectral Response of MA, LMA

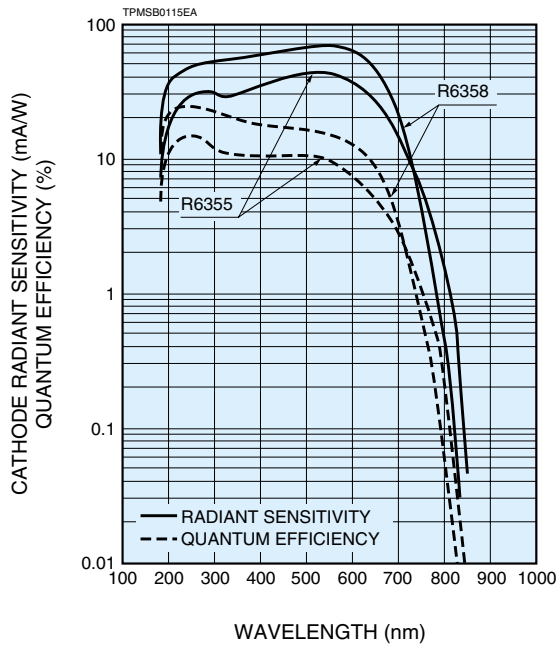

Figure 4: Typical Spectral Response of High Sensitivity MA

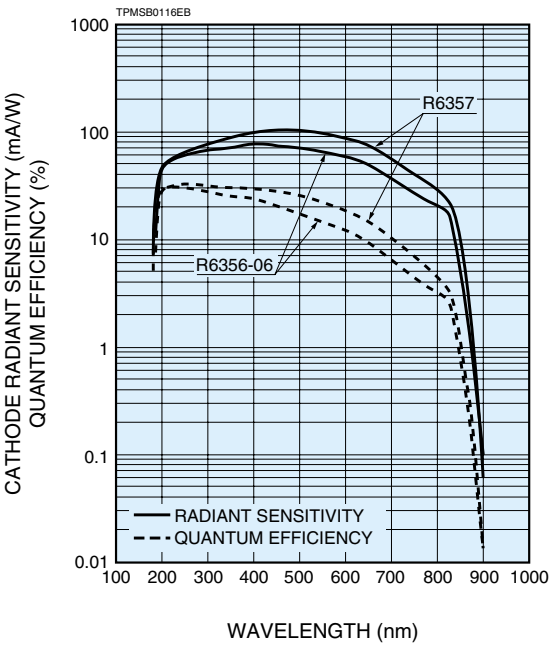

Figure 5: Typical Gain

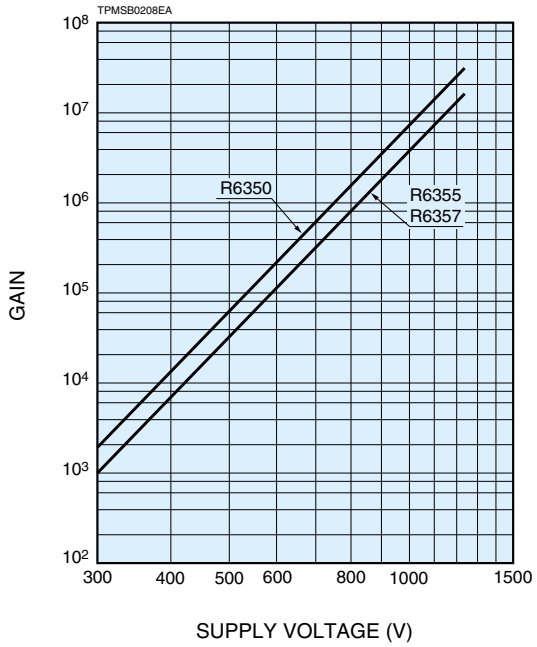

Figure 6: Typical Time Response

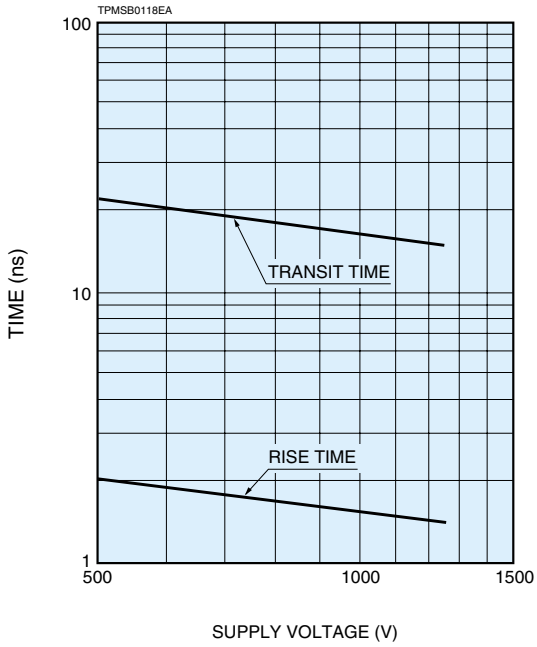

Figure 7: Typical ENI Characteristics

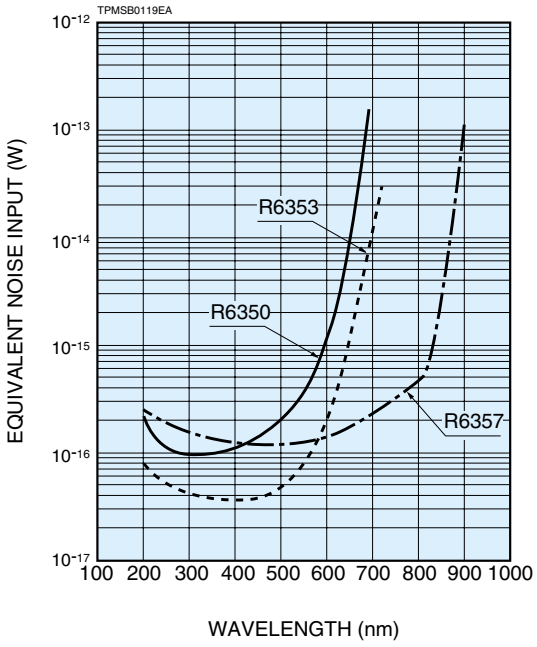

Figure 8: Typical Anode Uniformity

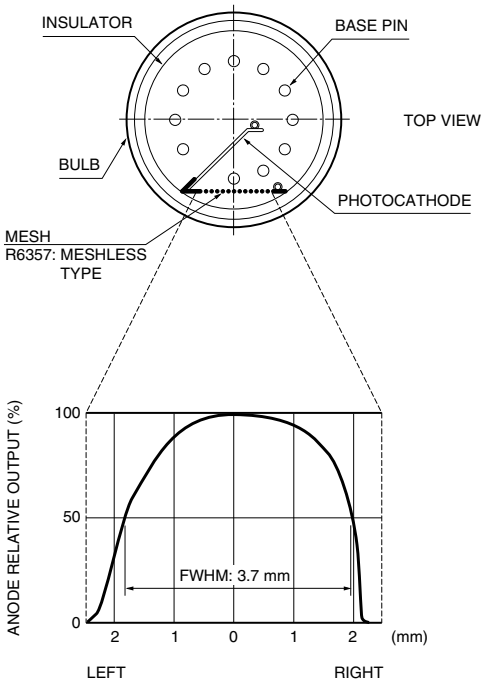

TPMSC0036EA

Figure 9: Dimensional Outline and Basing Diagram (Unit: mm)

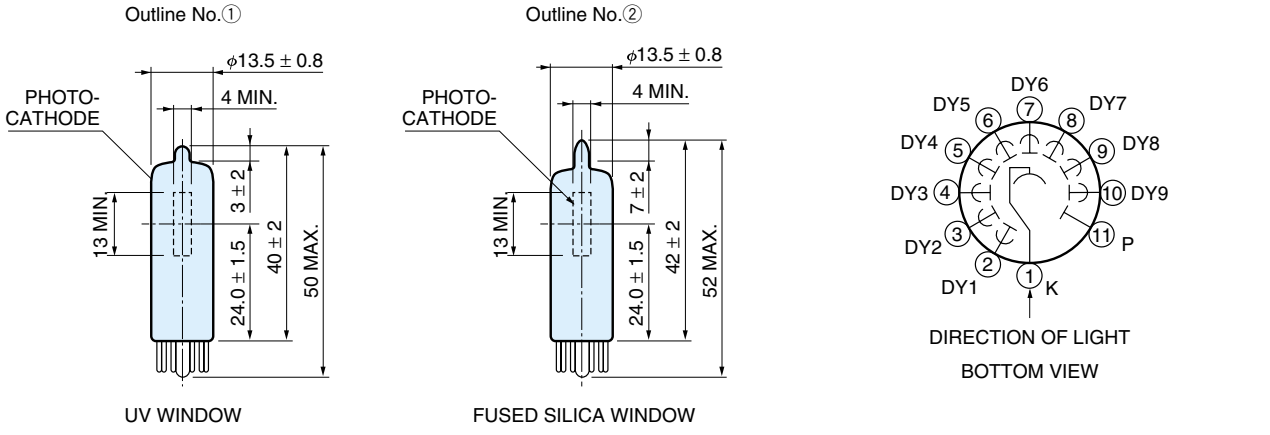

Socket

E678-11U

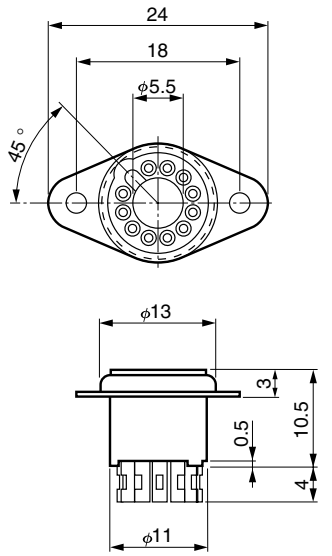

E678-11T (Sold Separately):
For direct soldering to PC board

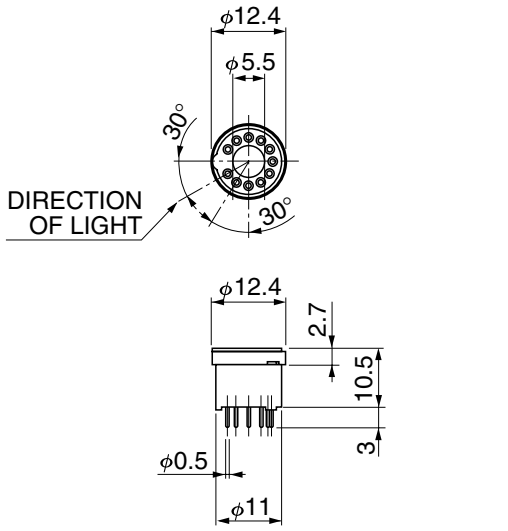

OPTIONAL ACCESSORIES

D-Type Socket Assembly

Type No.	Grounded Electrode / Supply Voltage Polarity	Maximum Ratings Ⓓ			Leakage Current in Signal Ⓑ Max. (A)	Total Voltage Divider Resistance (MΩ)	Maximum Linear Output in DC Mode Ⓒ (μA)	Signal Output
		Supply Voltage between Case and Pins (V)	Supply Voltage between Power Supply Terminals (V)	Voltage Divider Current Ⓐ (mA)				
E850-13Ⓔ	Anode / –	1500	1250	0.38	1×10^{-10}	3.3	18 (at 1250 V)	DC/Pulse

E850-22: with SHV, BNC connector

NOTE: Ⓐ Measured with the maximum supply voltage.
Ⓑ Measured with a supply voltage of 1000 V.
Ⓒ The current at which the output linearity is kept within ±5 %.
Ⓓ Operating temperature range is -20 °C to +50 °C.
Ⓔ Supplied with a separate mounting flange. See below for assembled dimensions.

Dimensional Outline and Circuit Diagram (Unit: mm)

E850-13

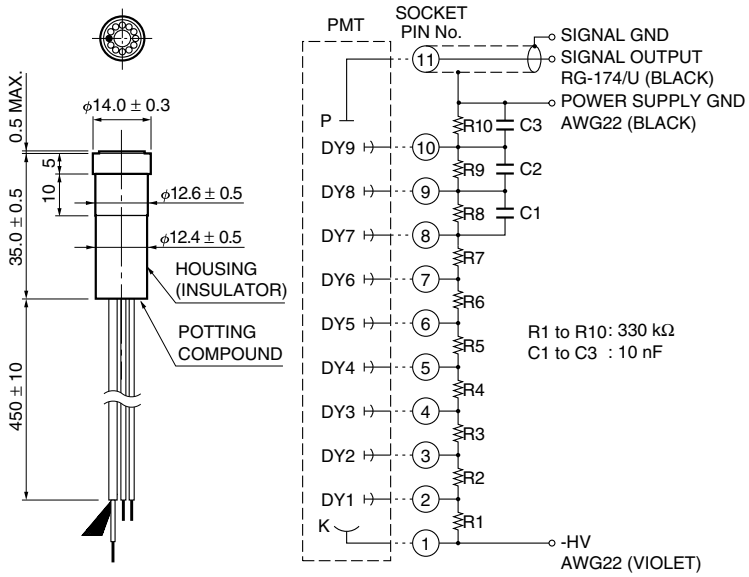

TACCA0096EC

Mounting Flange for E850-13

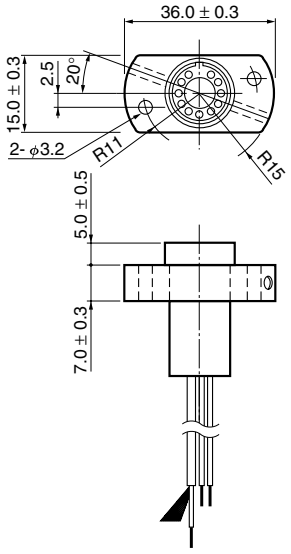

TACCA0097EB

LENS FOR 1/2 INCH DIAMETER SIDE-ON TYPE PHOTOMULTIPLIER TUBES

The optimized cylindrical lens which can be attached at the entrance window of 1/2 inch side-on photomultiplier tube. This lens helps the incident light reaches the photocathode efficiently.
With this lens, the effective area widens by the factor of two in case of 1/2" PMT (7.5 mm width). The lens transmits above 300 nm light only.

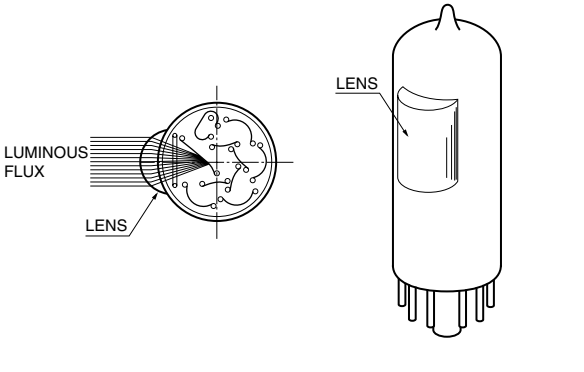

Figure 10: Transmittance of Lens

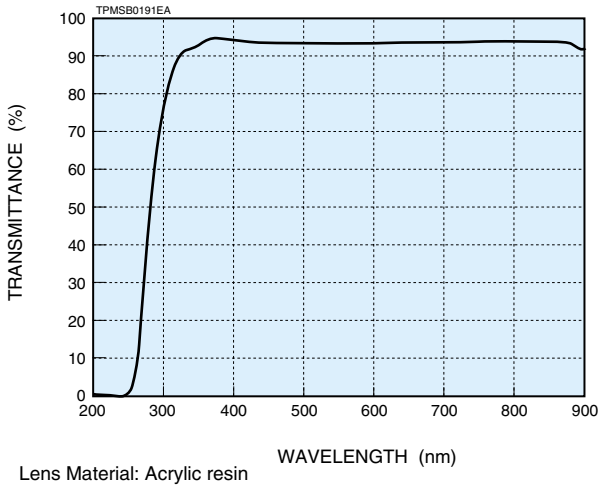

Lens Material: Acrylic resin

Figure 11: Uniformity

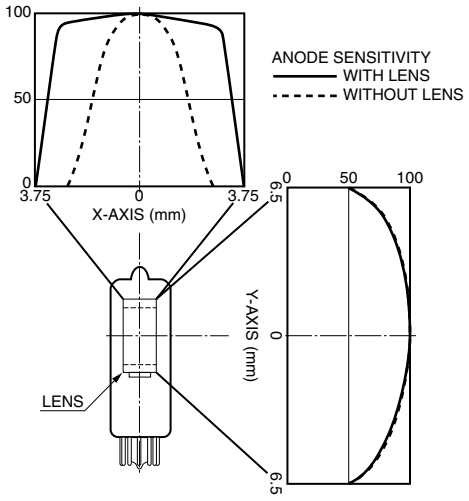

MEASUREMENT CONDITIONS
WAVELENGTH: 400 nm
SUPPLY VOLTAGE: -1000 V
A 1 mm diameter spot light (parallel light) is scanned
at the center of the photocathode in X and Y directions.

Figure 12: Lens Effect (Ex.: R6358)

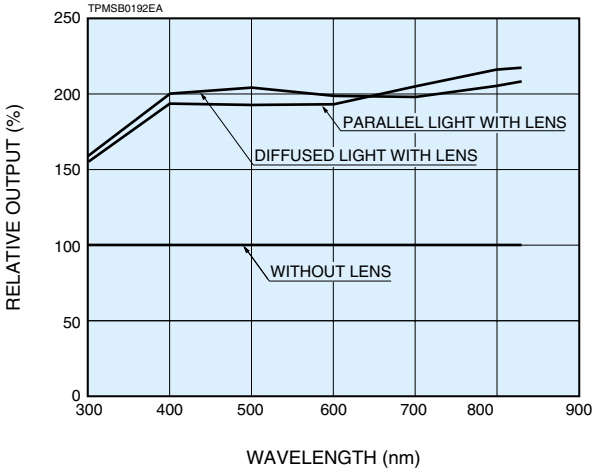

Parallel light:
Uniform and sufficiently large area, than the sensitive area size, of the parallel incident light (40 mm dia.) shall be given to the photomultiplier tube.

Diffused light:
Parallel light (40 mm dia.) is given to the photomultiplier tube through the diffuser, which locates 10 cm from the tube.

NOTE: The lens only (without photomultiplier tube) is not available.

⚠ WARNING ~High Voltage~

The product is operated at high voltage potential. Further, the metal housing of the product is connected to the photocathode (potential) so that it becomes a high voltage potential when the product is operated at a negative high voltage (anode grounded).
Accordingly, extreme safety care must be taken for the electrical shock hazard to the operator or the damage to the other instruments.

HAMAMATSU WEB SITE http://www.hamamatsu.com
HAMAMATSU PHOTONICS K.K., Electron Tube Division
314-5, Shimokanzo, Iwata City, Shizuoka Pref., 438-0193, Japan, Telephone: (81)539/62-5248, Fax: (81)539/62-2205
U.S.A.: Hamamatsu Corporation: 360 Foothill Road, P. O. Box 6910, Bridgewater. N.J. 08807-0910, U.S.A., Telephone: (1)908-231-0960, Fax: (1)908-231-1218 E-mail: usa@hamamatsu.com
Germany: Hamamatsu Photonics Deutschland GmbH: Arzbergerstr. 10, D-82211 Herrsching am Ammersee, Germany, Telephone: (49)8152-375-0, Fax: (49)8152-2658 E-mail: info@hamamatsu.de
France: Hamamatsu Photonics France S.A.R.L.: 8, Rue du Saule Trapu, Parc du Moulin de Massy, 91882 Massy Cedex, France, Telephone: (33)1 69 53 71 00, Fax: (33)1 69 53 71 10 E-mail: infos@hamamatsu.fr
United Kingdom: Hamamatsu Photonics UK Limited: 2 Howard Court, 10 Tewin Road Welwyn Garden City Hertfordshire AL7 1BW, United Kingdom, Telephone: 44-(0)1707-294888, Fax: 44(0)1707-325777 E-mail: info@hamamatsu.co.uk
North Europe: Hamamatsu Photonics Norden AB: Smidesvägen 12, SE-171-41 SOLNA, Sweden, Telephone: (46)8-509-031-00, Fax: (46)8-509-031-01 E-mail: info@hamamatsu.se
Italy: Hamamatsu Photonics Italia: S.R.L.: Strada della Moia, 1/E, 20020 Arese, (Milano), Italy, Telephone: (39)02-935 81 733, Fax: (39)02-935 81 741 E-mail: info@hamamatsu.it

TPMS1032E05
JUN. 2005. IP