Remote I/O R6 Series

ETHERNET INTERFACE MODULE

(Modbus/TCP, for 64-point analog signals)

Functions & Features

- Free combination of analog and discrete I/O
- Direct sensor inputs
- Space-saving
- Low power consumption

Typical Applications

- Remote I/O for DCS and PLC
- Personal computer I/O

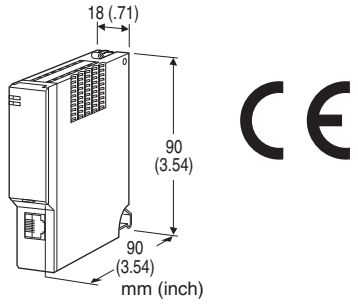

MODEL: R6-NE2[1]

ORDERING INFORMATION

- Code number: R6-NE2[1]

Specify a code from below for [1].
(e.g. R6-NE2/Q)

- Specify the specification for option code /Q
(e.g. /C01)

[1] OPTIONS

blank: none
/Q: With options (specify the specification)

SPECIFICATIONS OF OPTION: Q

COATING (For the detail, refer to M-System's web site.)
/C01: Silicone coating
/C02: Polyurethane coating

RELATED PRODUCTS

- PC configurator software (model: R6CON)

Downloadable at M-System's web site.
A dedicated cable is required to connect the module to the PC. Please refer to the internet software download site or the users manual for the PC configurator for applicable cable types.

GENERAL SPECIFICATIONS

Connection
Ethernet: RJ-45 connector
Internal bus: Via the Installation Base (model: R6x-BS)
Internal power: Via the Installation Base (model: R6x-BS)
Max. number of I/O modules: 32 (analog 64 points)
Isolation: Ethernet to internal bus or internal power
RUN indicator: Bi-color (green/red) LED; Green ON in normal communication; Red ON when receiving data (Function selected with DIP SW)
ERR indicator: Bi-color (green/red) LED;
Green ON or blinking at communication error; Red ON at transmitting data (Function selected with DIP SW)
Data allocation: Mode 1 or 2 set with the side DIP switch

ETHERNET COMMUNICATION

Communication Standard: IEEE 802.3u
Transmission: 10BASE-T, 100BASE-TX
Baud rate: 10/100 Mbps (Auto Negotiation function)
Protocol: Modbus/TCP
Data: RTU (Binary)
Max. number of socket connections: 2
Transmission media: 10BASE-T (STP, Category 5) 100BASE-TX (STP, Category 5e)
Max. length of fieldbus segment: 100 meters
IP address: 192.168.0.1 (factory setting);
Selectable with PC Configurator Software
Port No.: 502
Ethernet indicator LED: LINK, DPLX, LINK10, LINK100, COL

INSTALLATION

Operating temperature: -10 to +55°C (14 to 131°F)
Operating humidity: 30 to 90 %RH (non-condensing)
Atmosphere: No corrosive gas or heavy dust
Mounting: Installation Base (model: R6x-BS)
Weight: 100 g (0.22 lb)

PERFORMANCE

Insulation resistance: ≥ 100 MΩ with 500 V DC
Dielectric strength: 1500 V AC @ 1 minute (Ethernet to internal bus or internal power)

STANDARDS & APPROVALS

EU conformity:
EMC Directive
EMI EN 61000-6-4
EMS EN 61000-6-2
RoHS Directive
EN 50581

EXTERNAL VIEW

■ **SIDE VIEW**

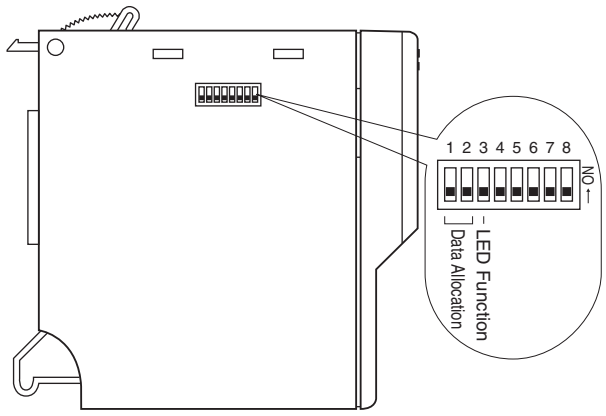

■ **FRONT VIEW**

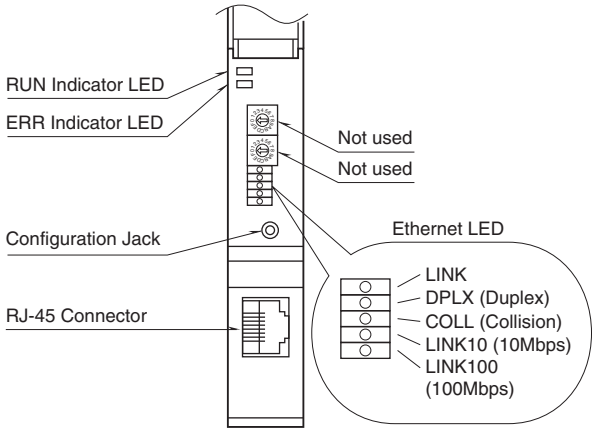

MODBUS FUNCTION CODES & SUPPORTED CODES

■ **Data and Control Functions**

CODE	NAME		
01	Read Coil Status	X	Digital output from the slave (read / write)
02	Read Input Status	X	Status of digital inputs to the slave (read only)
03	Read Holding Registers	X	General purpose register within the slave (read / write)
04	Read Input Registers	X	Collected data from the field by the slave (read only)
05	Force Single Coil	X	Digital output from the slave (read / write)
06	Preset Single Register	X	General purpose register within the slave (read / write)
07	Read Exception Status		
08	Diagnostics	X	
09	Program 484		
10	Poll 484		
11	Fetch Comm. Event Counter		Fetch a status word and an event counter
12	Fetch Comm. Event Log		A status word, an event counter, a message count and a field of event bytes
13	Program Controller		
14	Poll Controller		
15	Force Multiple Coils	X	Digital output from the slave (read / write)
16	Preset Multiple Registers	X	General purpose register within the slave (read / write)
17	Report Slave ID		
18	Program 884 / M84		
19	Reset Comm. Link		
20	Read General Reference		
21	Write General Reference		
22	Mask Write 4X Register		
23	Read / Write 4X Registers		
24	Read FIFO Queue		

■ **Exception Codes**

CODE	NAME		
01	Illegal Function	X	Function code is not allowable for the slave
02	Illegal Data Address	X	Address is not available within the slave
03	Illegal Data Value	X	Data is not valid for the function
04	Slave Device Failure		
05	Acknowledge		
06	Slave Device Busy		
07	Negative Acknowledge		
08	Memory Parity Error		

■ **Diagnostic Subfunctions**

CODE	NAME		
00	Return Query Data	X	Loop back test
01	Restart Comm. Option	X	Reset the slave and clear all counters
02	Return Diagnostic Register	X	Contents of the diagnostic data (2 bytes)
03	Change ASCII Input Delimiter	X	Delimiter character of ASCII message
04	Force Listen Only Mode	X	Force the slave into Listen Only Mode

MODBUS I/O ASSIGNMENT

The DIP SW located at the side of the module switches the unit's data allocation mode.
In the Data Allocation Mode 1, one (1) word is assigned per module. The second channel of analog I/O modules cannot be used.
In the Data Allocation Mode 2, two (2) words are assigned per module regardless of whether the second word area is required or not.
For discrete I/O, 16-channel area is automatically assigned to each module. With a 4-channel module, the bits assigned to ch. 5 through 16 remain "0."

Note: DO NOT access addresses other than mentioned below. Such access may cause problems such as inadequate operation.

Coil (0X)	1 – 16	Module address 0	Do 1 – 4
	17 – 32	Module address 1	Do 1 – 4
	33 – 48	Module address 2	Do 1 – 4
	49 – 64	Module address 3	Do 1 – 4
	:	:	:
	497 – 512	Module address 31	Do 1 – 4
Inputs (1X)	1 – 16	Module address 0	Di 1 – 4
	17 – 32	Module address 1	Di 1 – 4
	33 – 48	Module address 2	Di 1 – 4
	49 – 64	Module address 3	Di 1 – 4
	:	:	:
	497 – 512	Module address 31	Di 1 – 4
	513 – 544	Active module map	
	545 – 560	Status	
	561 – 624	Channel status	

■ **Data Allocation Mode 1**

Input Registers (3X)	1	Module address 0	Ai 1 (INT)
	2	Module address 1	Ai 1 (INT)
	3	Module address 2	Ai 1 (INT)
	4	Module address 3	Ai 1 (INT)
	:	:	:
	32	Module address 31	Ai 1 (INT)
	33, 34	Module address 0	Ai 1 (Float)
	35, 36	Module address 1	Ai 1 (Float)
	37, 38	Module address 2	Ai 1 (Float)
	39, 40	Module address 3	Ai 1 (Float)
	:	:	:
	95, 96	Module address 31	Ai 1 (Float)
Holding Registers (4X)	1	Module address 0	Ao 1 (INT)
	2	Module address 1	Ao 1 (INT)
	3	Module address 2	Ao 1 (INT)
	4	Module address 3	Ao 1 (INT)
	:	:	:
	32	Module address 31	Ao 1 (INT)
	33, 34	Module address 0	Ao 1 (Float)
	35, 36	Module address 1	Ao 1 (Float)
	37, 38	Module address 2	Ao 1 (Float)
	39, 40	Module address 3	Ao 1 (Float)
	:	:	:
	95, 96	Module address 31	Ao 1 (Float)

■ **Data Allocation Mode 2**

Input Registers (3X)	1	Module address 0	Ai 1 (INT)
	2	Module address 0	Ai 2 (INT)
	3	Module address 1	Ai 1 (INT)
	4	Module address 1	Ai 2 (INT)
	:	:	:
	63	Module address 31	Ai 1 (INT)
	64	Module address 31	Ai 2 (INT)
	65, 66	Module address 0	Ai 1 (Float)
	67, 68	Module address 0	Ai 2 (Float)
	69, 70	Module address 1	Ai 1 (Float)
	71, 72	Module address 1	Ai 2 (Float)
	:	:	:
	189, 190	Module address 31	Ai 1 (Float)
	191, 192	Module address 31	Ai 2 (Float)
Holding Registers (4X)	1	Module address 0	Ao 1 (INT)
	2	Module address 0	Ao 2 (INT)
	3	Module address 1	Ao 1 (INT)
	4	Module address 1	Ao 2 (INT)
	:	:	:
	63	Module address 31	Ao 1 (INT)
	64	Module address 31	Ao 2 (INT)
	65, 66	Module address 0	Ao 1 (Float)
	67, 68	Module address 0	Ao 2 (Float)
	69, 70	Module address 1	Ao 1 (Float)
	71, 72	Module address 1	Ao 2 (Float)
	:	:	:
	189, 190	Module address 31	Ao 1 (Float)
	191, 192	Module address 31	Ao 2 (Float)

■ **ACTIVE MODULE MAP**

Indicates the slots where I/O modules are mounted. When the module is mounted, the corresponding bit turns to "1."

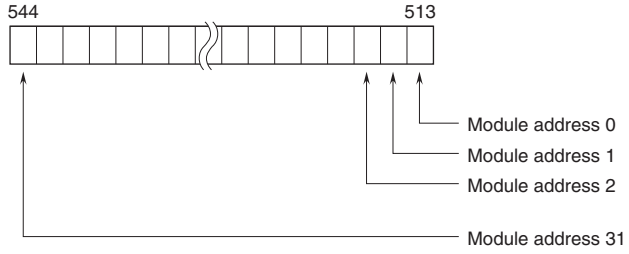

■ **STATUS**

Communication status data. When one or more I/O modules are mounted on the base, the corresponding bit turns to "0."

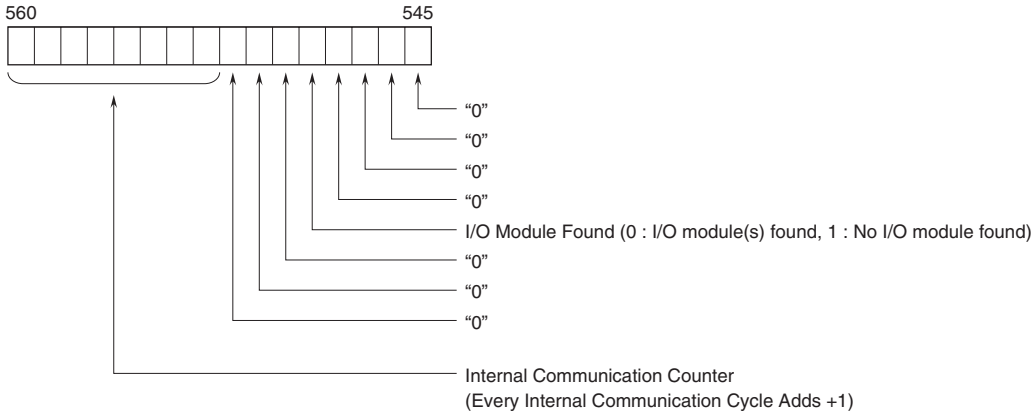

■ CHANNEL STATUS

Analog input modules check high/low limits and ADC. When there is an error in one or more channels, the bit corresponding to the channels turns to "1."
DC current output modules check output wire breakdown to alert as an error. The bit corresponding to the channels turns to "1."

• Data Allocation Mode 1

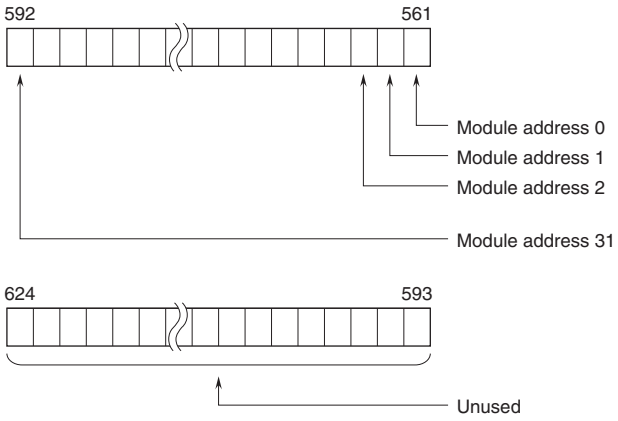

• Data Allocation Mode 2

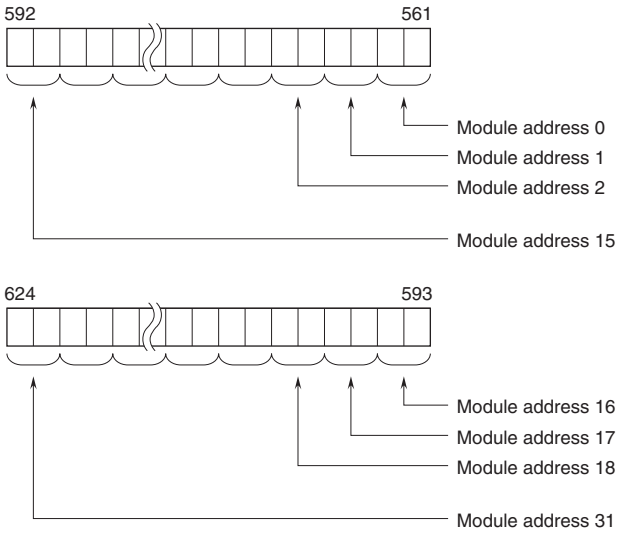

In the Data Allocation Mode 2, the LSB is used for channel 1, and the MSB for channel 2, of an analog module.

I/O DATA DESCRIPTIONS

■ 16-BIT ANALOG DATA

0 to 100% of the selected I/O range is converted into 0 to 10000 (binary).
With °C or Kelvin temperature unit, raw data is multiplied by 10. For example, 25.5°C is converted into 255.
With °F temperature unit, the integer section of raw data is directly converted into the data. For example, 135.4°F is converted into 135.
Negative values are represented in 2's complements.



■ DISCRETE DATA

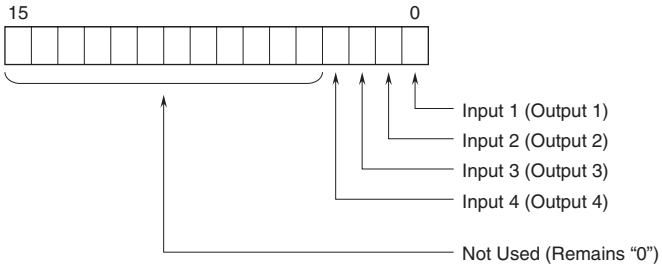

0 : OFF
1 : ON

EXTERNAL DIMENSIONS unit: mm (inch)

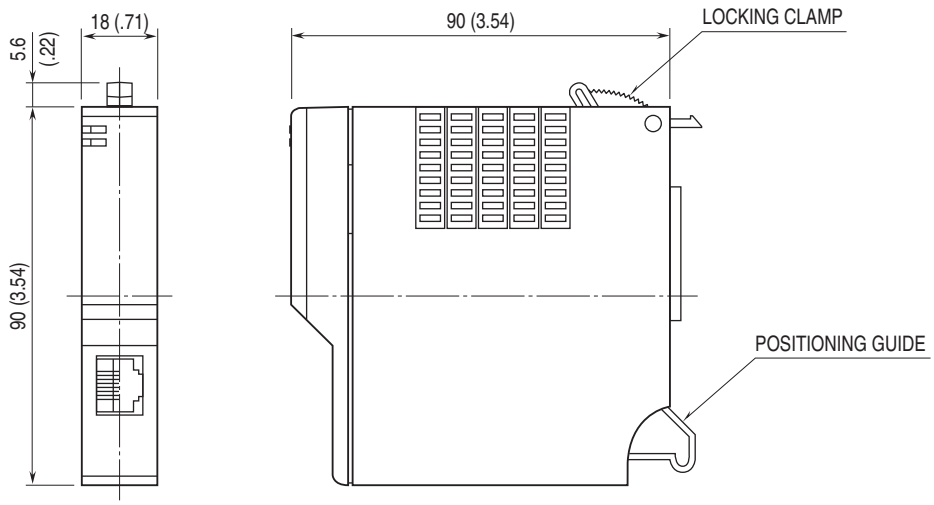

SCHEMATIC CIRCUITRY & CONNECTION DIAGRAM

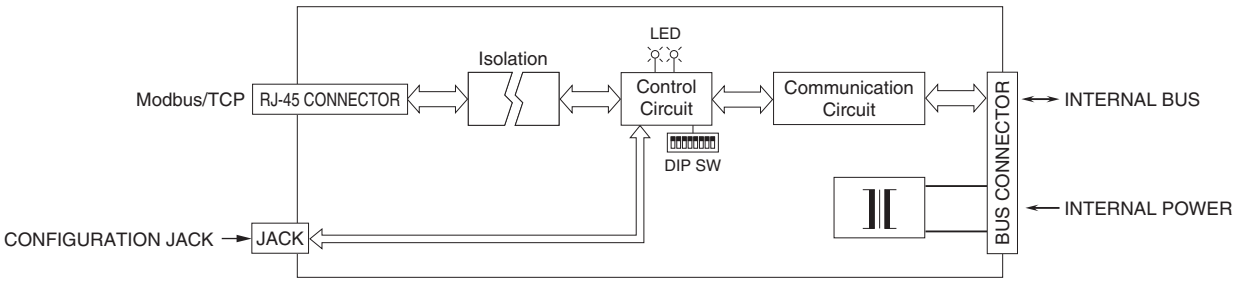

SYSTEM CONFIGURATION EXAMPLES

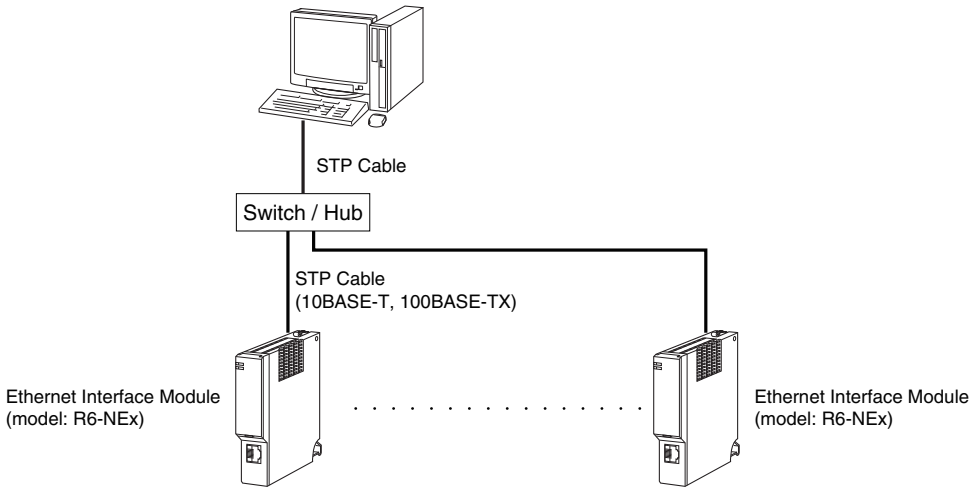

⚠ Specifications are subject to change without notice.