R59 Series

Features

- Replaces Slow Blow Glass Cartridge Fuse
- .250" (6.35mm) Quick Connect Terminals
- Snap–In Mounting
- Visual Trip Indicator
- Push Button to Reset Breaker

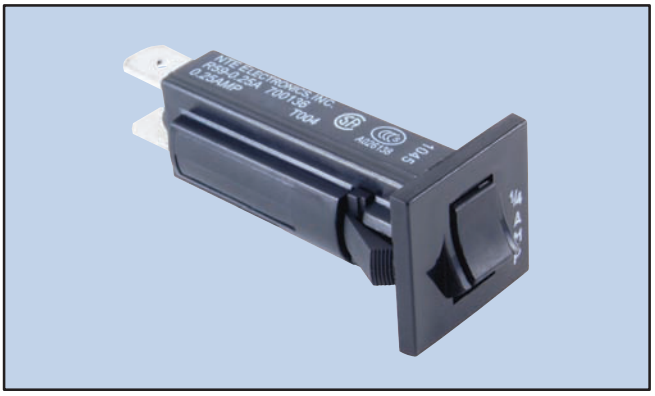

Thermal Circuit Breaker, Fuse Holder Type

D41

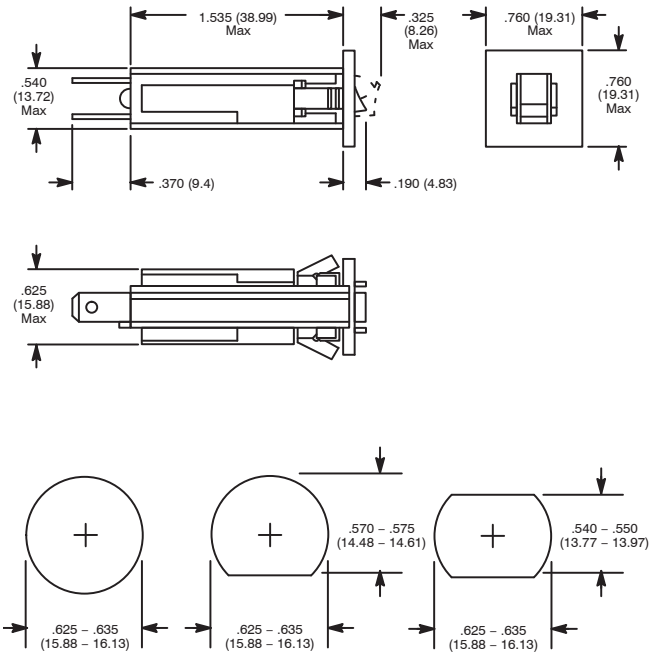

Recommended Panel Cutouts
Recommended Panel Thickness: .032 – .062 (.813 – 1.574)

NTE Type No.	Current Rating Amps	Typical Resistance Ohms
R59–0.25A	0.25	14.0
R59–0.5A	0.50	3.55
R59–1A	1.0	0.89
R59–2A	2.0	0.17
R59–3A	3.0	0.069
R59–4A	4.0	0.043
R59–5A	5.0	0.030
R59–6A	6.0	0.026
R59–7A	7.0	0.017
R59–8A	8.0	0.016
R59–10A	10.0	0.011
R59–12A	12.0	0.009
R59–15A	15.0	0.007
R59–20A	20.0	0.007

Trip Times

0.25 to 2 Amp Types		3.0 to 20 Amp Types	
Rated Load	Trip Times	Rated Load	Trip Times
100%	No Trip	100%	No Trip
175%	Trip in 1 Hour	135%	Trip in 1 Hour
200%	4.5 to 28.0 Sec.	200%	2.2 to 15.0 Sec.
400%	1.0 to 6.5 Sec.	400%	0.55 to 1.8 Sec.
600%	0.4 to 4.0 Sec.	600%	0.27 to 0.7 Sec.
		800%	0.17 to 0.45 Sec.
		1000%	0.12 to 0.3 Sec.

Electrical Specifications

Electrical Characteristics (@ 25°C)

Calibration: Will continuously carry 100% of rating.
0.25 to 2 Amp types: May trip between 101% and 174%, but must trip at 175% of rating within one hour at +25°C
3.0 to 20 Amp types: May trip between 101% and 134%, but must trip at 135% of rating within one hour at +25°C
Maximum Operating Voltages: 32 VDC; 250 VAC, @ 50/60 Hz
Dielectric Strength: 1500VAC RMS
Resettable Overload Capacity:
0.25 to 2 Amp types: Six times rated current
3.0 to 20 Amp types: Ten times rated current
Reset Time:
0.25 to 2 Amp types: 180 seconds max.
3.0 to 20 Amp types: 10 to 60 seconds typ.
Interrupt Capacity: 1000 Amps @ 250 VAC, 50/60 Hz. and 32 VDC in accordance with UL standard 1077

Mechanical Characteristics

Termination: .250 (6.35) Quick Connect Terminals
NOTE: Soldering to terminals is not recommended.
Mounting: Snaps into panel from front
(See Recommended Panel Cutouts)
Weight: 0.35 ozs. (10 g) approx.