HAMAMATSU

PHOTON IS OUR BUSINESS

PHOTOMULTIPLIER TUBE
R580

For Scintillation Counting and High Energy Physics
38 mm (1-1/2 Inch) Diameter, 10-stage, Bialkali Photocathode, Head-on Type

GENERAL

Parameter		Description	Unit
Spectral Response		300 to 650	nm
Wavelength of Maximum Response		420	nm
Photocathode	Material	Bialkali	—
	Minimum Effective Area	ϕ34	mm
Window Material		Borosilicate glass	—
Dynode	Structure	Linear focused	—
	Number of Stages	10	—
Direct Interelectrode Capacitances	Anode to Last Dynode	3	pF
	Anode to All Other Electrodes	7	pF
Operating Ambient Temperature		-30 to +50	°C
Storage Temperature		-30 to +50	°C
Base		JEDEC No. B12-43	—
Suitable Socket		E678-12A (supplied)	—

MAXIMUM RATINGS (Absolute Maximum Values)

Parameter		Value	Unit
Supply Voltage	Between Anode and Cathode	1750	V
	Between Anode and Last Dynode	350	V
Average Anode Current		0.1	mA

CHARACTERISTICS (at 25 °C)

Parameter		Min.	Typ.	Max.	Unit
Cathode Sensitivity	Luminous (2856 K)	70	95	—	μA/lm
	Radiant at 420 nm	—	88	—	mA/W
	Blue Sensitivity Index (CS 5-58)	9	11	—	—
	Quantum Efficiency at 420 nm	—	27	—	%
Anode Sensitivity	Luminous (2856 K)	10	100	—	A/lm
Gain		—	1.1×10^6	—	—
Anode Dark Current (after 30 min storage in darkness)		—	3	20	nA
Time Response	Anode Pulse Rise Time	—	2.7	—	ns
	Electron Transit Time	—	37	—	ns
	Transit Time Spread (FWHM)	—	4.5	—	ns
Pulse Linearity (±2 % deviation) *		—	150	—	mA

NOTE: Anode characteristics are measured with the voltage distribution ratio shown below.
* Measured with the special voltage distribution ratio shown below.

VOLTAGE DISTRIBUTION RATIO AND SUPPLY VOLTAGE

Electrodes	K	Dy1	Dy2	Dy3	Dy4	Dy5	Dy6	Dy7	Dy8	Dy9	Dy10	P
Ratio	2	1	1	1	1	1	1	1	1	1	1	1

Supply Voltage : 1250 V, K : Cathode, Dy : Dynode, P : Anode

SPECIAL VOLTAGE DISTRIBUTION RATIO FOR PULSE LINEARITY MEASUREMENT

Electrodes	K	Dy1	Dy2	Dy3	Dy4	Dy5	Dy6	Dy7	Dy8	Dy9	Dy10	P
Ratio	2	1	1	1	1	1	1.2	1.5	2.2	3.6	3	
Parallel Capacitors in μF								0.01	0.02	0.04	0.06	

Supply Voltage :1500 V

Subject to local technical requirements and regulations, availability of products included in this promotional material may vary. Please consult with our sales office.
Information furnished by HAMAMATSU is believed to be reliable. However, no responsibility is assumed for possible inaccuracies or omissions. Specifications are subject to change without notice. No patent rights are granted to any of the circuits described herein. ©2014 Hamamatsu Photonics K.K.

PHOTOMULTIPLIER TUBE R580

Figure 1: Typical Spectral Response

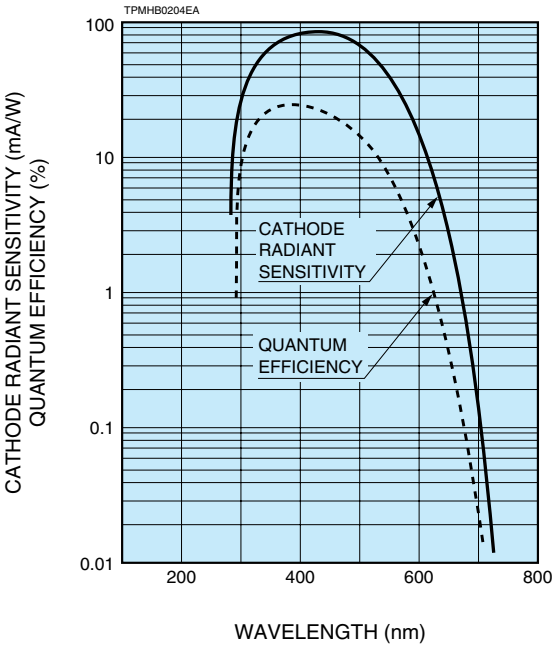

Figure 2: Dimensional Outline and Basing Diagram (Unit: mm)

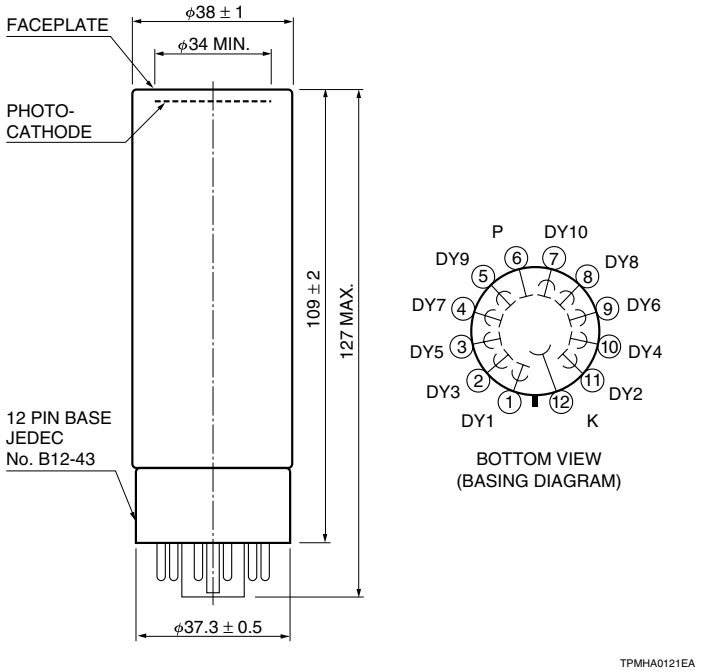

Figure 3: Accessories (Unit: mm)

Socket E678-12A (Supplied)

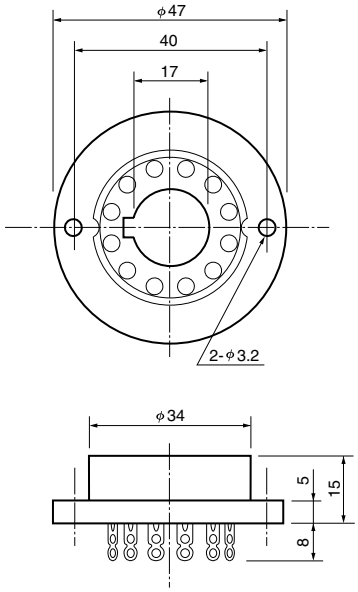

D type Socket Assembly E2183-500 (Sold separately)

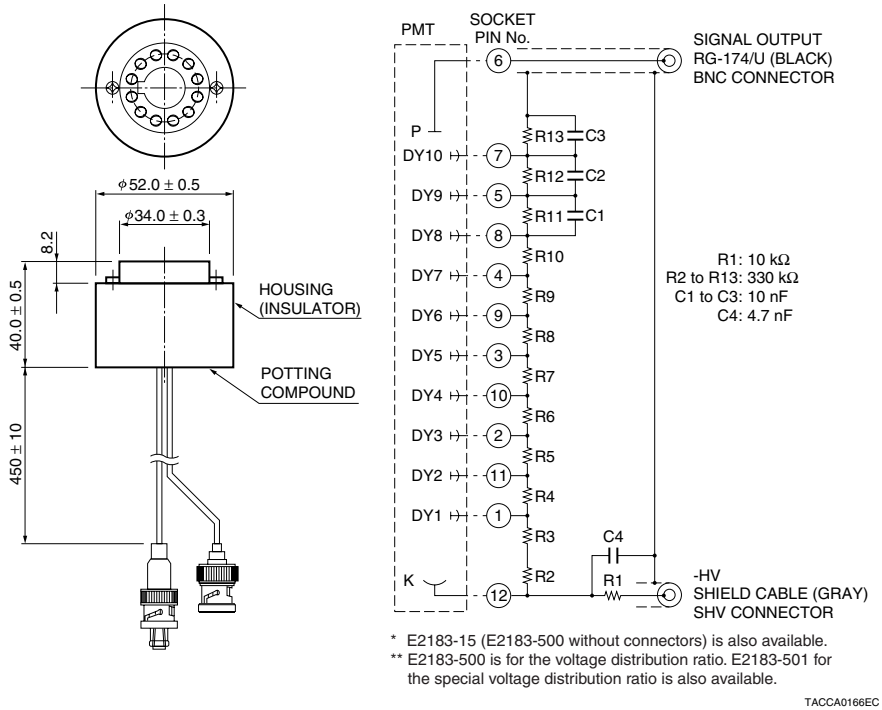

* HAMAMATSU also provides C9525 series bench-top type and C9619 series module type high voltage power supplies.

HAMAMATSU PHOTONICS K.K. www.hamamatsu.com

HAMAMATSU PHOTONICS K.K., Electron Tube Division
314-5, Shimokanzo, Iwata City, Shizuoka Pref., 438-0193, Japan, Telephone: (81)539/62-5248, Fax: (81)539/62-2205

U.S.A.: Hamamatsu Corporation: 360 Foothill Road, Bridgewater. N.J. 08807-0910, U.S.A., Telephone: (1)908-231-0960, Fax: (1)908-231-1218 E-mail: usa@hamamatsu.com
Germany: Hamamatsu Photonics Deutschland GmbH: Arzbergerstr. 10, D-82211 Herrsching am Ammersee, Germany, Telephone: (49)8152-375-0, Fax: (49)8152-2658 E-mail: info@hamamatsu.de
France: Hamamatsu Photonics France S.A.R.L.: 19, Rue du Saule Trapu, Parc du Moulin de Massy, 91882 Massy Cedex, France, Telephone: (33)1 69 53 71 00, Fax: (33)1 69 53 71 10 E-mail: infos@hamamatsu.fr
United Kingdom: Hamamatsu Photonics UK Limited: 2 Howard Court, 10 Tewin Road, Welwyn Garden City, Hertfordshire AL7 1BW, United Kingdom, Telephone: (44)1707-294888, Fax: (44)1707-325777 E-mail: info@hamamatsu.co.uk
North Europe: Hamamatsu Photonics Norden AB: Torshamnsgatan 35 SE-164 40 Kista, Sweden, Telephone: (46)8-509-031-00, Fax: (46)8-509-031-01 E-mail: info@hamamatsu.se
Italy: Hamamatsu Photonics Italia S.r.l.: Strada della Moia, 1 int. 6, 20020 Arese (Milano), Italy, Telephone: (39)02-93581733, Fax: (39)02-93581741 E-mail: info@hamamatsu.it
China: Hamamatsu Photonics (China) Co., Ltd.: B1201 Jiaming Center, No.27 Dongsanhuan Beilu, Chaoyang District, Beijing 100020, China, Telephone: (86)10-6586-6006, Fax: (86)10-6586-2866 E-mail: hpc@hamamatsu.com.cn

TPMH1100E04
JUN. 2014 IP