Remote I/O R3 Series

THERMOCOUPLE INPUT MODULE

(high accuracy, 8 points, isolated)

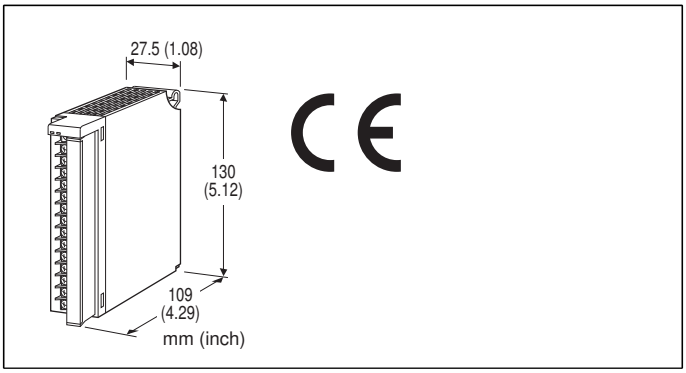

MODEL: R3-TS8A[1][2]

ORDERING INFORMATION

• Code number: R3-TS8A[1][2]

Specify a code from below for each of [1] and [2].
(e.g. R3-TS8AW/CE/Q)

• Specify the specification for option code /Q
(e.g. /C01/SET)

NO. OF CHANNELS

8A: 8 channels, high accuracy

[1] COMMUNICATION MODE

S: Single
W: Dual

[2] OPTIONS (multiple selections)

Standards & Approvals

blank: Without CE
/CE: CE marking

Other Options

blank: none
/Q: Option other than the above (specify the specification)

SPECIFICATIONS OF OPTION: Q (multiple selections)

COATING (For the detail, refer to M-System's web site.)

/C01: Silicone coating
/C02: Polyurethane coating
/C03: Rubber coating

EX-FACTORY SETTING

/SET: Preset according to the Ordering Information Sheet (No. ESU-8278)

GENERAL SPECIFICATIONS

Connection
Internal bus: Via the Installation Base (model: R3-BSx)
Input: M3 separable screw terminal (torque 0.5 N·m)
Internal power: Via the Installation Base (model: R3-BSx)
Screw terminal: Nickel-plated steel
Isolation: Input 1 to input 2 to input 3 to input 4 to input 5 to input 6 to input 7 to input 8 to internal bus or internal power
Sensor type: Selectable with the side DIP SW
(Independent types selectable per group of 4 channels.)
Temperature unit: °C or °F selectable with the side DIP SW
Conversion rate: Selectable with the side DIP SW
Burnout detection: Upscale or downscale selectable with the side DIP SW
Linearization: Standard
0˚C offset: Offset is set to 0˚C based on the present input status using the PC configurator software (model: R3CON).
Cold junction compensation: CJC sensor attached to the input terminals
RUN indicator: Bi-color (red/green) LED;
Red when the bus A operates normally;
Green when the bus B operates normally;
Amber when both buses operate normally.
ERR indicator: Bi-color (red/green) LED;
Red with burnout; Green in normal operating conditions.

INPUT SPECIFICATIONS

Input resistance: 30 kΩ min.
Burnout sensing: 0.1 μA

Temperature range

T/C	Conformance Range °C	Burnout Values °C×100	
		Lower	Upper
K (CA)	-100 to +200	-27200	+32767
T (CC)	-100 to +200	-27200	+32767
T/C	Conformance Range °F	Burnout Values °F×10	
		Lower	Upper
K (CA)	-148 to +392	-4000	+16520
T (CC)	-148 to +392	-4000	+16520

INSTALLATION

Operating temperature: -10 to +55°C (14 to 131°F)
Operating humidity: 30 to 90 %RH (non-condensing)
Atmosphere: No corrosive gas or heavy dust
Mounting: Installation Base (model: R3-BSx)
Weight: 250 g (0.55 lb)

PERFORMANCE

Conversion accuracy: ±0.5°C (±0.9°F)
Conversion rate: 250 msec. or 1 sec. selectable
Data range
°C: Engineering unit value × 100 (integer)
°F: Engineering unit value × 10 (integer)
Data allocation: 8
Current consumption: 100 mA
Cold junction compensation error:
±0.5°C at 25 ±10°C
±0.9°F at 77 ±18°F
Temp. coefficient: ±0.015 %/°C (±0.008 %/°F)
Burnout response time: ≤ 2 sec.
Insulation resistance: ≥ 100 MΩ with 500 V DC
Dielectric strength: 1500 V AC @ 1 minute (input 1 to input 2 to input 3 to input 4 to input 5 to input 6 to input 7 to input 8 to internal bus or internal power)
2000 V AC @ 1 minute (power input to FG; isolated on the power supply module)

STANDARDS & APPROVALS

EU conformity:
EMC Directive
EMI EN 61000-6-4
EMS EN 61000-6-2
RoHS Directive
EN 50581

EXTERNAL VIEW

■ **SIDE VIEW**

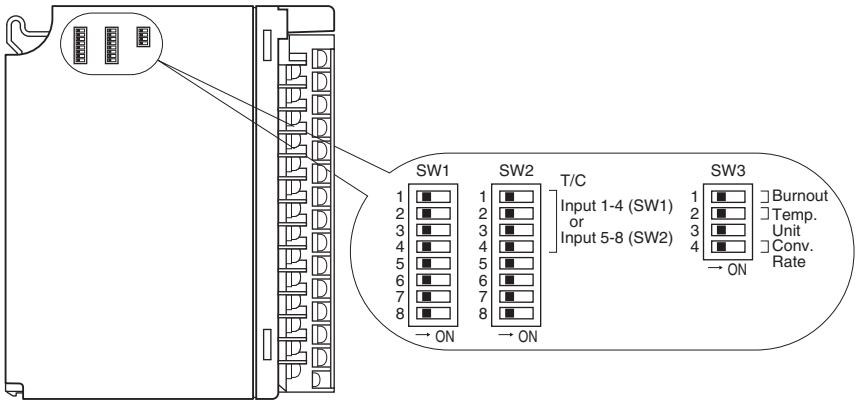

■ **FRONT VIEW**

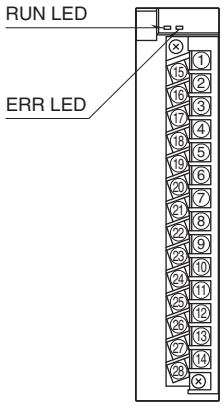

INPUT DATA DESCRIPTIONS

■ ANALOG DATA (TEMPERATURE DATA)

16-bit binary data.
With ℃ temperature unit, raw data is multiplied by 100. For example, 25.5℃ is converted into 2550.
With ℉ temperature unit, raw data is multiplied by 10. For example, 135.4℉ is converted into 1354.
Minus temperature is converted into negative values, represented in 2's complements.



EXTERNAL DIMENSIONS & TERMINAL ASSIGNMENTS unit: mm (inch)

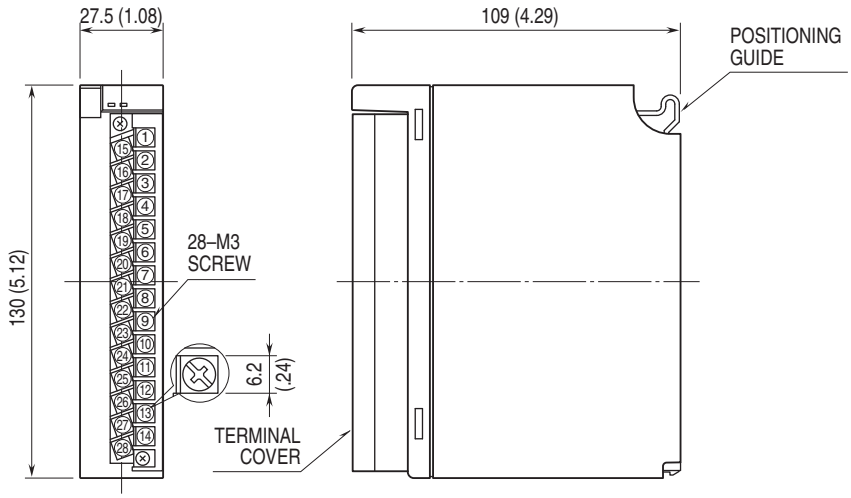

SCHEMATIC CIRCUITRY & CONNECTION DIAGRAM

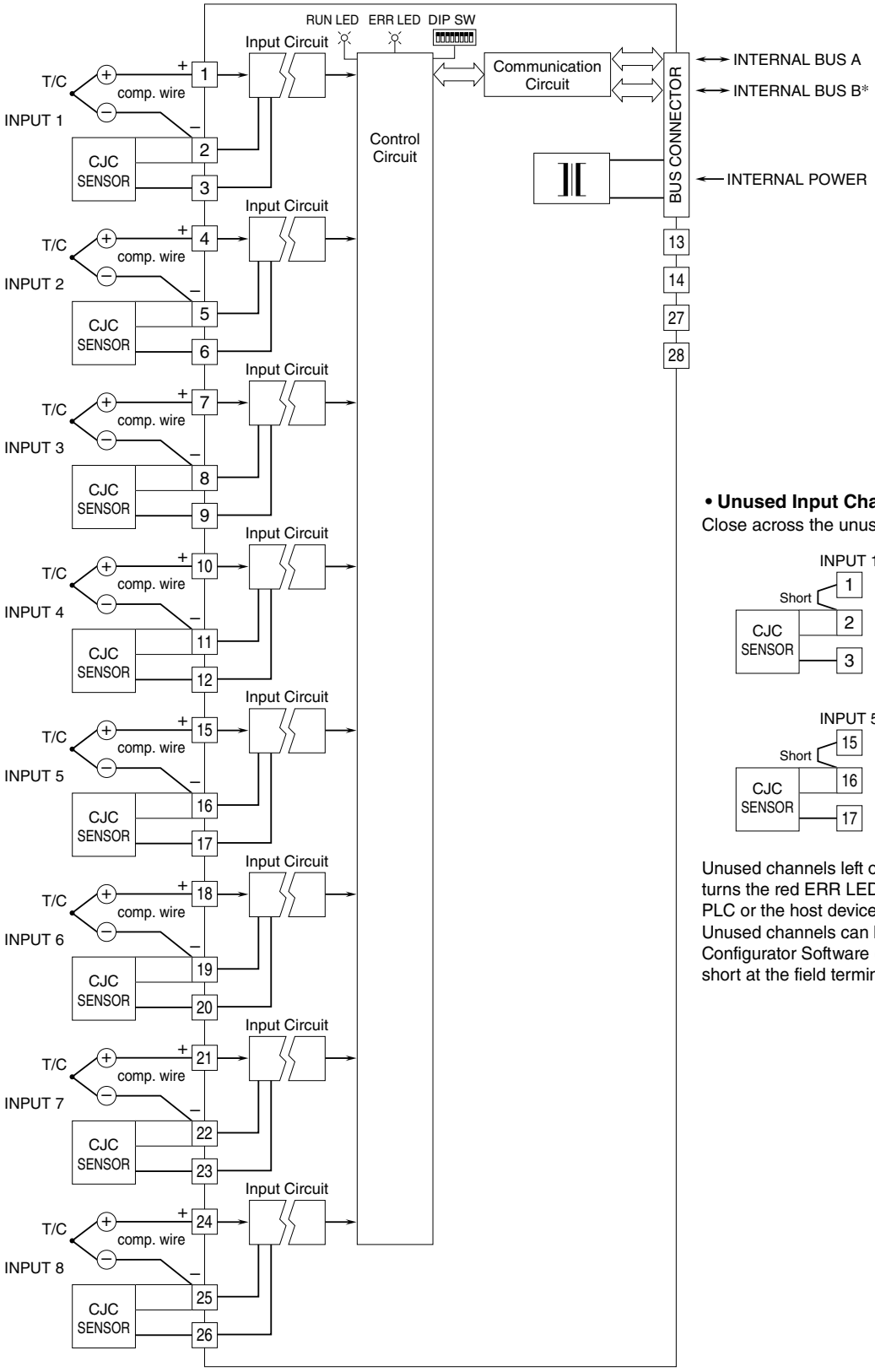

*For dual redundant communication.

• Unused Input Channels

Close across the unused input terminals as shown below.

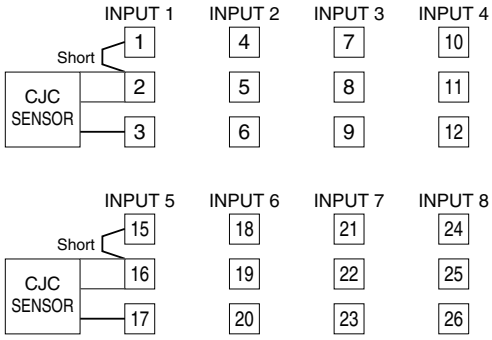

Unused channels left open are equal to the burnout, which turns the red ERR LED on and sets a burnout flag at the PLC or the host device.
Unused channels can be specified and set so on the PC Configurator Software (model: R3CON) without needing to short at the field terminals.

⚠ Specifications are subject to change without notice.