Remote I/O R3 Series

4 – 20 mA INPUT MODULE

(2-wire transmitter excitation supply; 8 points, non-isolated)

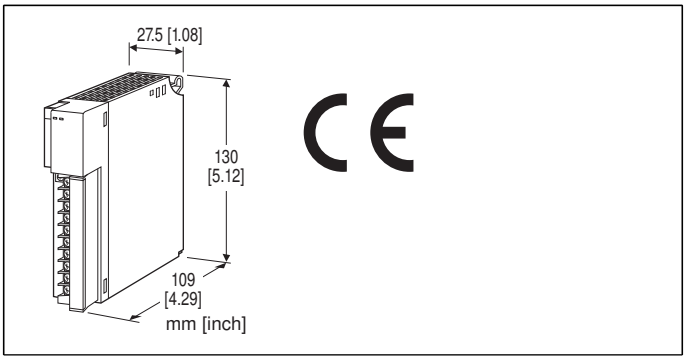

MODEL: R3-DS8N[1][2]

ORDERING INFORMATION

• Code number: R3-DS8N[1][2]
Specify a code from below for each of [1] and [2].
(e.g. R3-DS8NW/CE/Q)
• Specify the specification for option code /Q
(e.g. /C01/SET)

NO. OF CHANNELS

8: 8

ISOLATION

N: Non-isolated between inputs

[1] COMMUNICATION MODE

S: Single
W: Dual

[2] OPTIONS (multiple selections)

Standards & Approvals
blank: Without CE
/CE: CE marking
Other Options
blank: none
/Q: Option other than the above (specify the specification)

SPECIFICATIONS OF OPTION: Q (multiple selections)

COATING (For the detail, refer to M-System's web site.)
/C01: Silicone coating
/C02: Polyurethane coating
/C03: Rubber coating
EX-FACTORY SETTING
/SET: Preset according to the Ordering Information Sheet (No. ESU-8369)

GENERAL SPECIFICATIONS

Connection
Internal bus: Via the Installation Base (model: R3-BSx)
Input: M3 separable screw terminal (torque 0.5 N·m)
Internal power: Via the Installation Base (model: R3-BSx)
Screw terminal: Nickel-plated steel
Isolation: Input to internal bus or internal power
Conversion rate: Selectable with the side DIP SW
RUN indicator: Bi-color (red/green) LED;
Red when the bus A operates normally;
Green when the bus B operates normally;
Amber when both buses operate normally.
ERR indicator: Bi-color (red/green) LED;
Red with input circuit abnormality (AD converter response failure);
Green in normal operating conditions.

SUPPLY OUTPUT

Sensor excitation: 24 V DC, ≥ 300 mA
• **Shortcircuit Protection**
Current limited: Approx. 30 mA per channel
Protected time duration: No limit

INPUT SPECIFICATIONS

■ **DC Current**: 4 – 20 mA DC
Input resistance: 250 Ω resistor incorporated

INSTALLATION

Operating temperature: -10 to +55°C (14 to 131°F)
Operating humidity: 30 to 90 %RH (non-condensing)
Atmosphere: No corrosive gas or heavy dust
Mounting: Installation Base (model: R3-BSx)
Weight: 200 g (0.44 lb)

PERFORMANCE

Conversion accuracy: Refer to the table at the end of this section.
Conversion rate: 160 / 80 / 40 / 20 msec. selectable (factory default: 160 msec.)
Data range: 0 – 10000
Data allocation: 8
Current consumption: 60 mA
Temp. coefficient: ±0.015 %/°C (±0.008 %/°F)
Response time: ≤ 0.2 sec. (0 – 90 %)
Insulation resistance: ≥ 100 MΩ with 500 V DC
Dielectric strength: 1500 V AC @ 1 minute
(input to internal bus or internal power)
2000 V AC @ 1 minute (power input to FG; isolated on the power supply module)

Conversion accuracy

RATE	160 msec.	80 msec.	40 msec.	20 msec.
ACCURACY	±0.05%	±0.1%	±0.2%	±0.4%

STANDARDS & APPROVALS

EU conformity:
EMC Directive
EMI EN 61000-6-4
EMS EN 61000-6-2
RoHS Directive

EXTERNAL VIEW

■ **FRONT VIEW**

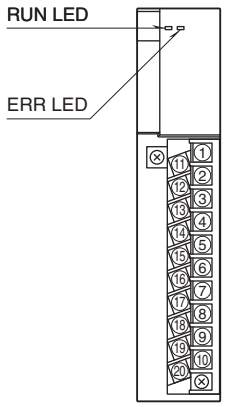

■ **SIDE VIEW**

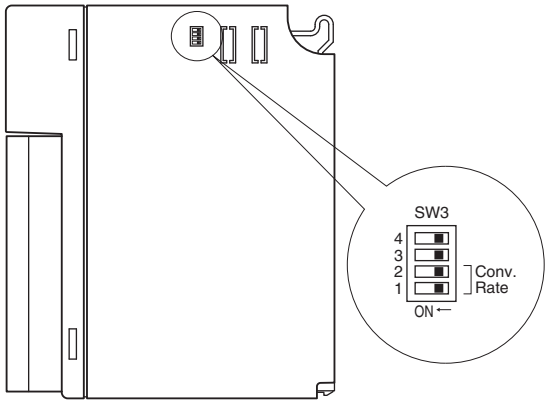

EXTERNAL DIMENSIONS & TERMINAL ASSIGNMENTS unit: mm [inch]

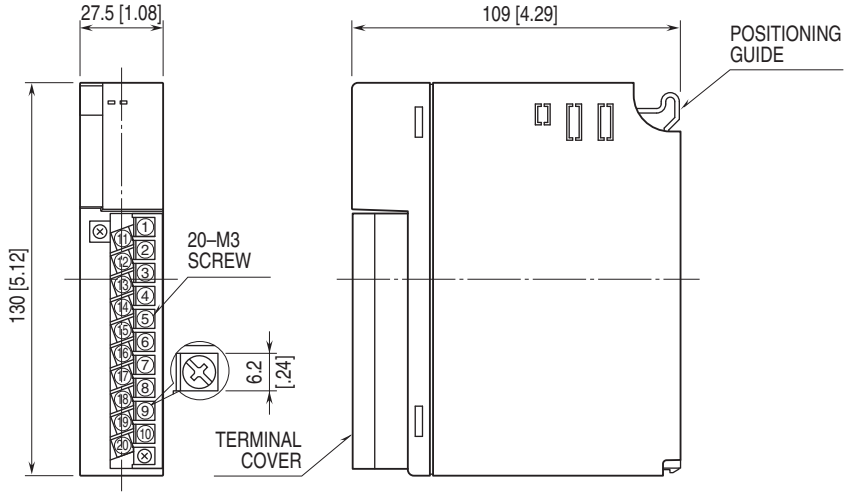

SCHEMATIC CIRCUITRY & CONNECTION DIAGRAM

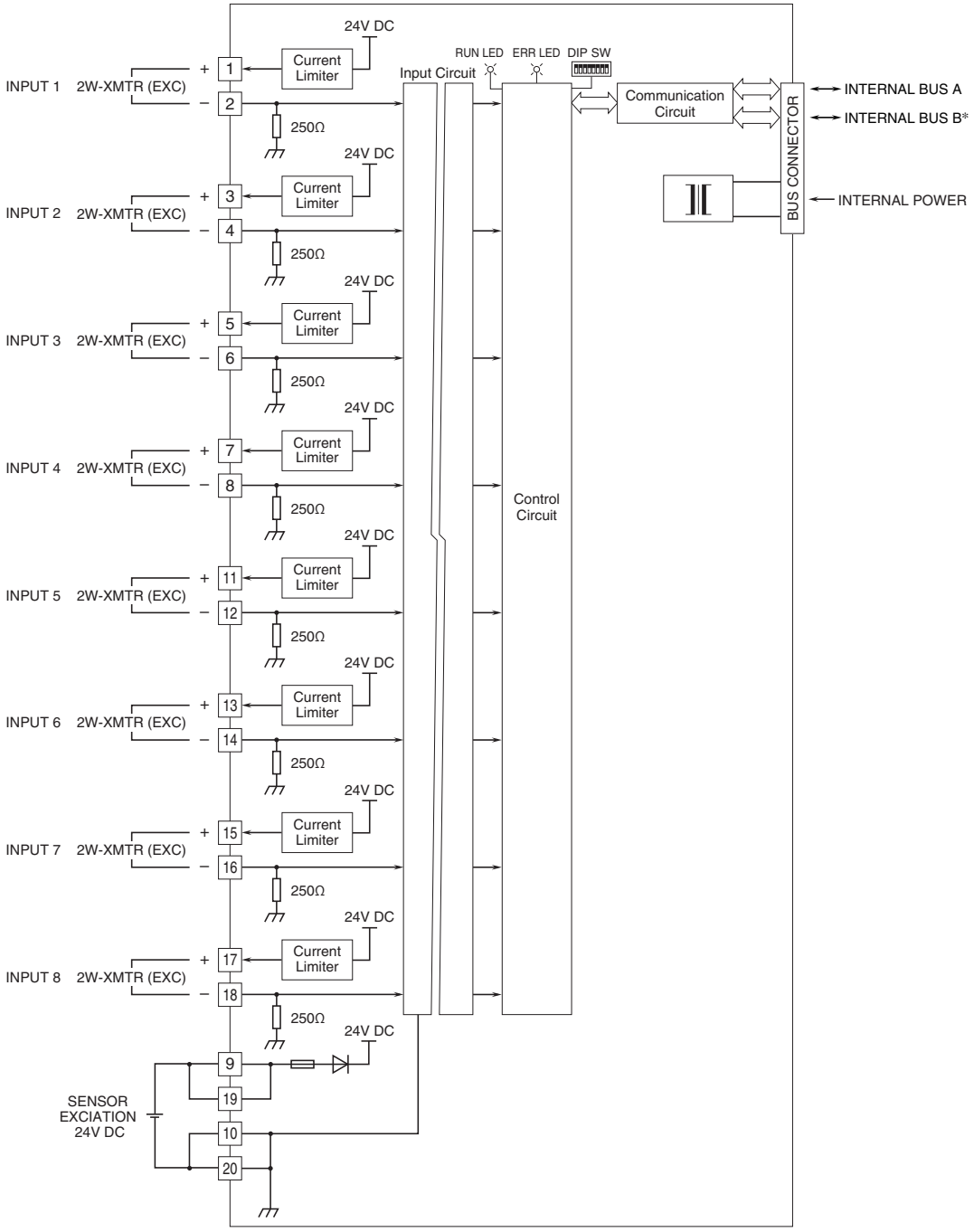

*For dual redundant communication.

• Unused Input Channels

Close across the unused input terminals with a resistor (5kΩ, 0.5W) as shown below.

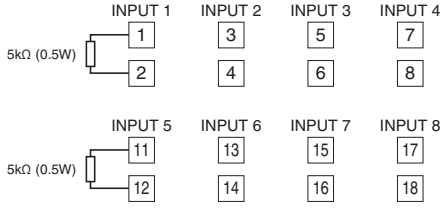

Unused channels left open are equal to the input lower than -15%, which sets a data abnormality at the PLC or the host device. Unused channels can be specified and set so on the PC Configurator Software (model: R3CON) without needing to connect resistors at the field terminals.

⚠ Specifications are subject to change without notice.