R2A20134SP

LED Lighting Power Controller

R03DS0033EJ0200
Rev.2.00
Jun 03, 2011

Description

R2A20134SP is a LED lighting controller IC.

Control method is selectable for each system demand, fixed frequency or zero current detection mode.

High accuracy LED current feed-back system makes more efficient LED performance.

Critical Conduction Mode PFC control realizes high power factor and zero current switching.

And Peak Current Mode makes it possible to reduce external parts and realize low system cost.

Features

- Absolute Maximum Ratings
  - Supply voltage Vcc: 24 V
  - Operating junction temperature Tjopr: –40 to +150°C
- Electrical characteristics
  - UVLO operation start voltage VH: 12 V ± 0.8 V
  - UVLO operation shutdown voltage VL: 9.2 V ± 0.7 V
  - UVLO hysteresis voltage Hysuvl: 2.8 V ± 0.7 V
- Functions
  - Selectable for each targeted system,
    1. Zero current detection mode (When Rrt is connected by GND)
    2. Fixed frequency mode (When Rrt is connected by Vref)
  - Adjustable for Switching frequency (When Rrt is connected by Vref)
  - Overcurrent protection
  - Package lineup: Pb-free SOP-8 (JEDEC)

Ordering Information

Part No.	Package Name	Package Code	Package Abbreviation	Taping Abbreviation (Quantity)
R2A20134SP#W5	—	PRSP0008DJ-A	SP	W (2,500 pcs/reel)

Pin Arrangement

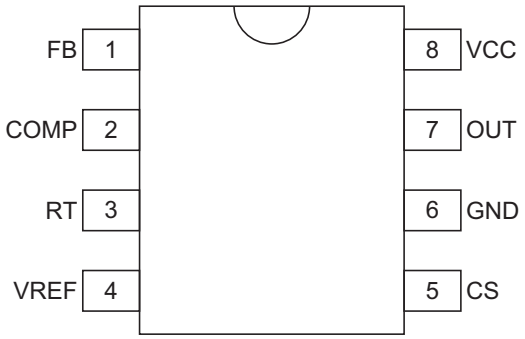

(Top view)

Pin Function

Pin No.	Pin Name	Input/Output	Function
1	FB	Input	Error amplifier input terminal
2	COMP	Output	Error amplifier output terminal
3	RT	Input/Output	A resistor connection terminal for RAMP current setting
4	VREF	Output	Reference voltage output terminal
5	CS	Input	Zero current detection and overcurrent detection input terminal
6	GND	—	Ground
7	OUT	Output	Power MOSFET drive terminal
8	VCC	Input	Supply voltage terminal

Block Diagram

• **Rrt: Connect to GND (Zero Current Detection Mode)**

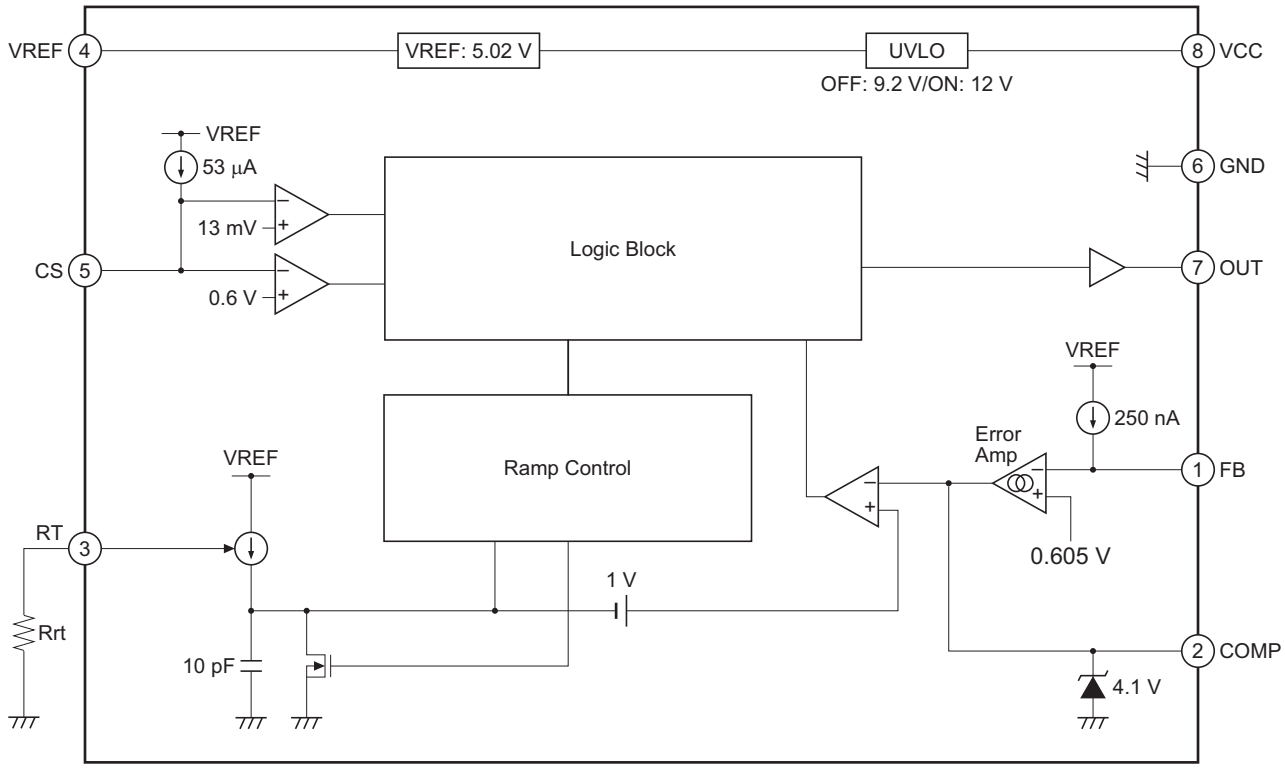

• **Rrt: Connect to VREF (Fixed Frequency Mode)**

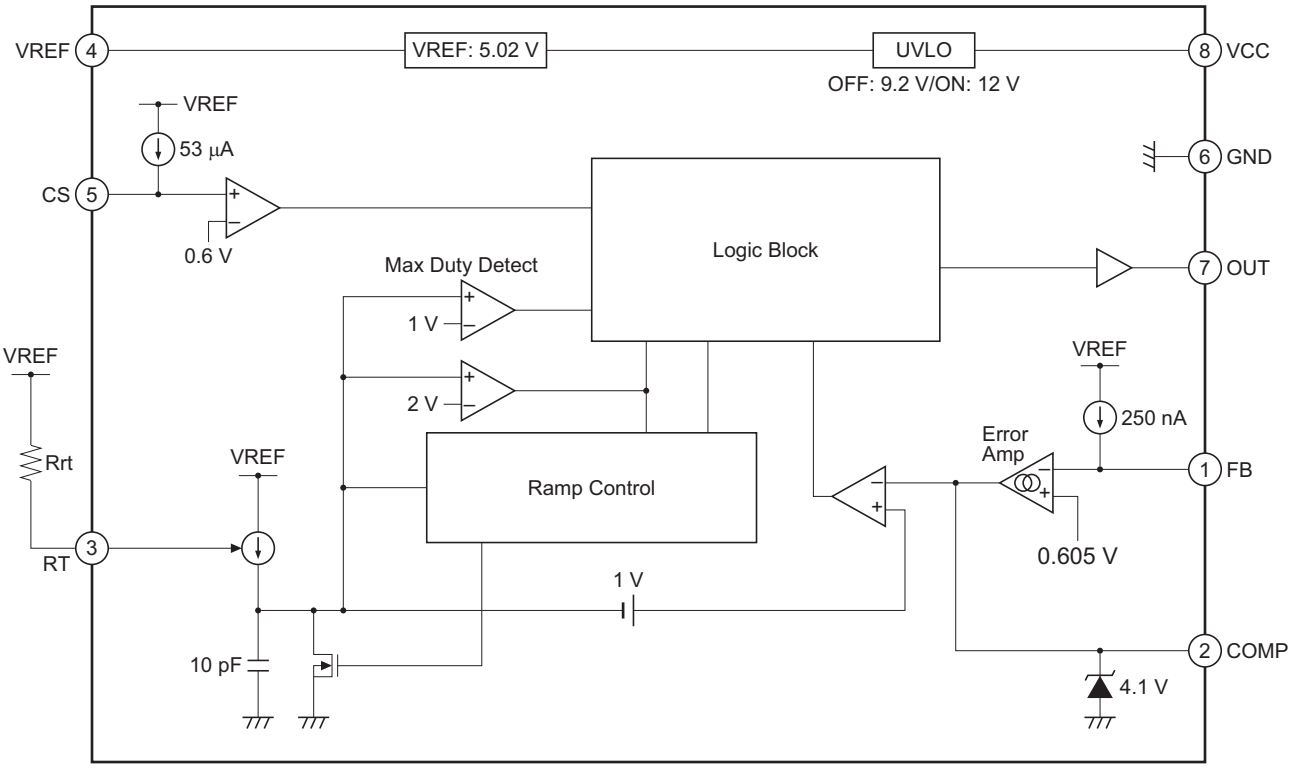

Absolute Maximum Ratings

(Ta = 25°C)

Item	Symbol	Ratings	Unit	Note
Power Supply Voltage	VCC	–0.3 to +24	V	
OUT terminal peak current	Ipk-snk-out	0.9	A	3
	Ipk-src-out	–0.50		
OUT terminal DC current	Idc-snk-out	100	mA	
	Idc-src-out	–50		
RT terminal current	Irt	–200	μA	
VREF terminal current	Iref	–5	mA	
Vref terminal voltage	Vt-ref	–0.3 to Vref + 0.3	V	
FB terminal voltage	Vt-fb	–0.3 to +5	V	
CS terminal voltage	Vcs	–0.3 to +5	V	
Power dissipation	Pt	0.68	W	4
Operating junction temperature	Tj-pr	–40 to +150	°C	
Storage temperature	Tstg	–55 to +150	°C	

Notes: 1. Rated voltages are with reference to the GND terminal.
2. For rated currents, inflow to the IC is indicated by (+), and outflow by (–).
3. Shows the transient current when driving a capacitive load.
4. In case of R2A20134SP: θja = 120°C/W
This value is a thing mounting on 40 × 40 × 1.6 [mm], a glass epoxy board of wiring density 10%.

Electrical Characteristics

(Ta = 25°C, VCC = 15 V, CS = 0 V, FB = COMP, RRT = 200 kΩ)

Item		Symbol	Min	Typ	Max	Unit	Test Conditions
Supply	UVLO turn-on threshold	Vuvlh	11.2	12	12.8	V	
	UVLO turn-off threshold	Vuvll	8.5	9.2	9.9	V	
	UVLO hysteresis	Hysuvl	2.1	2.8	3.5	V	
	Standby current	Istby	—	130	250	μA	VCC = Vuvlh – 0.2 V
	Operating current	Icc	—	2.2	3.3	mA	
VREF	Reference voltage	Vref	4.945	5.020	5.095	V	Isource = 0 mA
	Temperature stability	dVref	—	±80	—	ppm/°C	Tj = –40 to 150°C *1
	Line regulation	Vref-line	—	5	20	mV	Isource = 0 mA Vcc = 10 V to 24 V
	Load regulation	Vref-load	—	5	20	mV	Isource = 0 mA to –5 mA
Error amplifier	Feedback voltage	Vfb	0.587	0.605	0.623	V	
	Input bias current	Ifb	–0.75	–0.25	–0.1	μA	Measured pin: FB
	Open loop gain	Av	—	63	—	dB	
	Upper clamp voltage	Vclamp_comp	3.85	4.10	4.30	V	FB = 0.3 V COMP: Open
	Low voltage	Vl-comp	—	0.1	0.3	V	FB = 0.9 V COMP: Open
	Source current	Isrc-comp	–13	–9.5	–6	μA	FB = 0.3 V COMP: 2.5 V
	Sink current	Isnk-comp	6	9.5	13	μA	FB = 0.9 V COMP: 2.5 V
	Transconductance	gm	25	45	70	μs	FB = 0.55 V ↔ 0.65 V COMP: 2.5 V
RT	RAMP offset voltage	Voffset_ramp	—	1.0	—	V	
	RAMP amplitude	dVramp	2.9	3.1	3.3	V	*2
	RT voltage1	V-rt1	1.9	2.0	2.1	V	RT-GND: 200 kΩ
	RT voltage2	V-rt2	2.9	3.0	3.1	V	RT-Vref: 200 kΩ
Zero current detector	ZCD threshold voltage	Vzcd	7	13	19	mV	
	Input bias current	Ics	–85	–53	–25	μA	Vcs = 13 mV
Restart	Restart time delay	Tstart	45	75	140	μs	FB = 0.3 V, COMP = 2.5 V

Notes: *1 Design spec

*2 dVramp = Vclamp_comp – Voff_ramp

Electrical Characteristics (cont.)

(Ta = 25°C, VCC = 15 V, CS = 0 V, FB = COMP, RRT = 200 kΩ)

Item		Symbol	Min	Typ	Max	Unit	Test Conditions
OUT	Rise time	tr-out	—	30	100	ns	CL = 1000 pF, FB = 0.3 V, COMP = 2.5 V
	Fall time	tf-out	—	30	100	ns	CL = 1000 pF, FB = 0.3 V, COMP = 2.5 V
	OUT low voltage	Vol1-out	—	0.08	0.20	V	Isink = 20 mA
		Vol2-out	—	0.05	0.70	V	Isink = 10 mA, VCC = 5 V
	OUT high voltage	Voh-out	14.5	14.8	—	V	Isource = –20 mA *1
	OUT frequency	fout	43	48	53	kHz	RT-Vref: 200 kΩ *3
	Maximum duty cycle	Dmax	47	52	57	%	RT-Vref: 200 kΩ
Over current protection	OCP threshold voltage	Vocp	0.57	0.6	0.63	V	
	OCP blanking time	tblank	170	300	450	ns	

Notes: *1 Design spec

*3 The fout is adjusted by changing resistance of Rrt connected between RT-VREF terminals. Reference data and a calculating formula are shown as follows.

$$fout\ [kHz] = \frac{1}{(100 \times 10^{-9} \times Rrt) + (450 \times 10^{-6})}$$

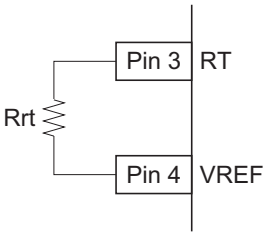

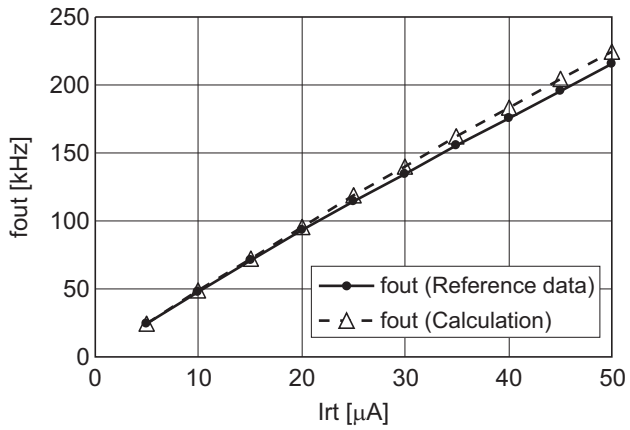

* The graph is for reference only and does not guarantee actual characteristic.

Waveforms

1. Start-up Timing (Zero Current Detection Mode/Fixed Frequency Mode common)

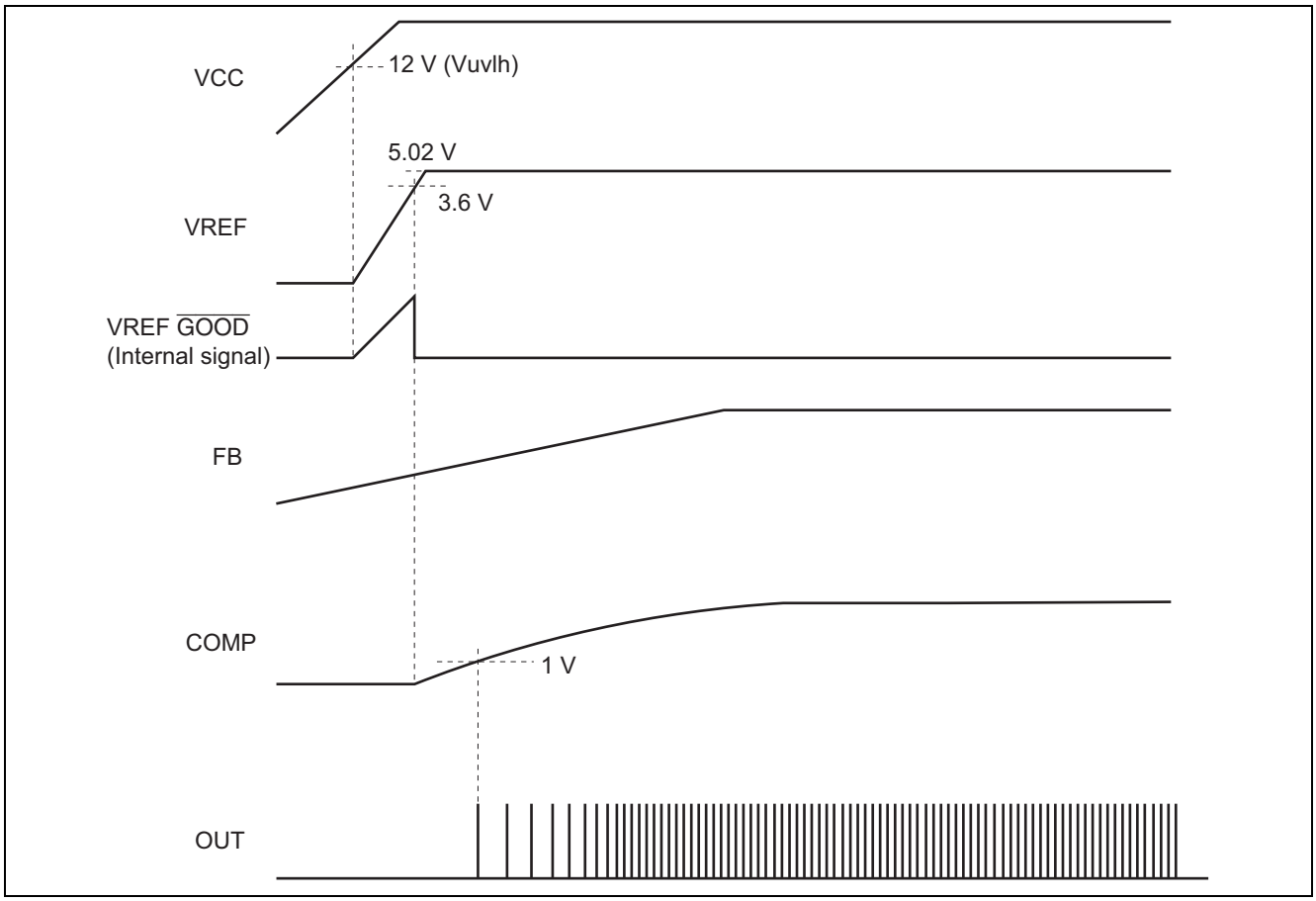

2. Stop Timing (Zero Current Detection Mode/Fixed Frequency Mode common)

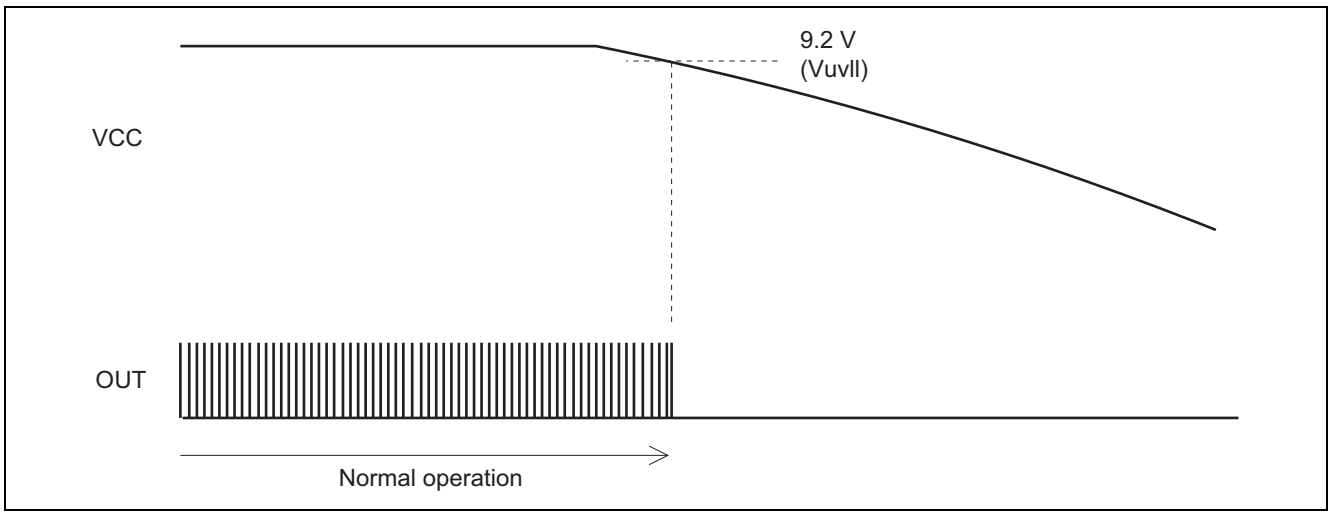

3. Gate Drive Output (Zero Current Detection Mode)

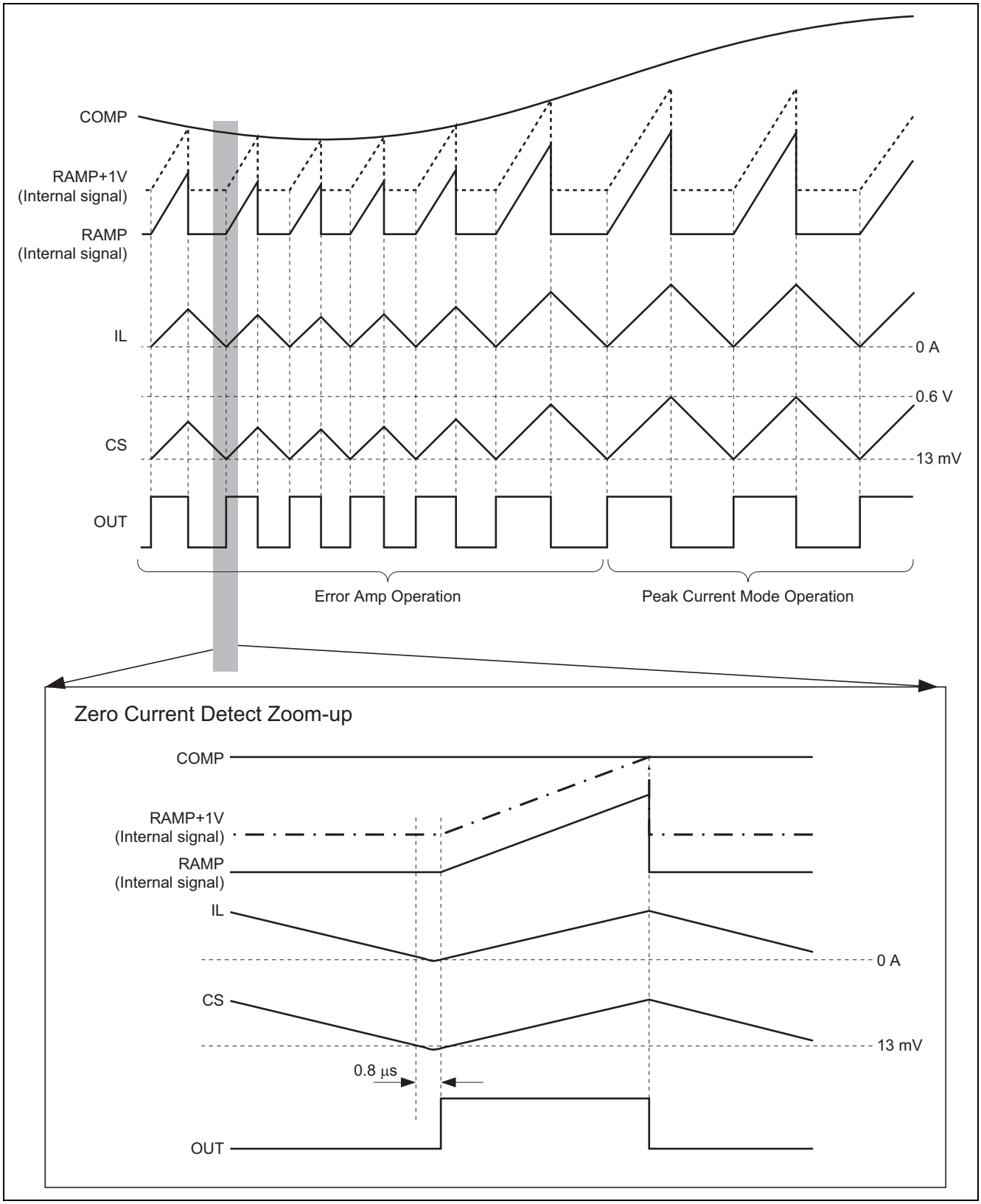

4. Gate Drive Output (Fixed Frequency Mode)

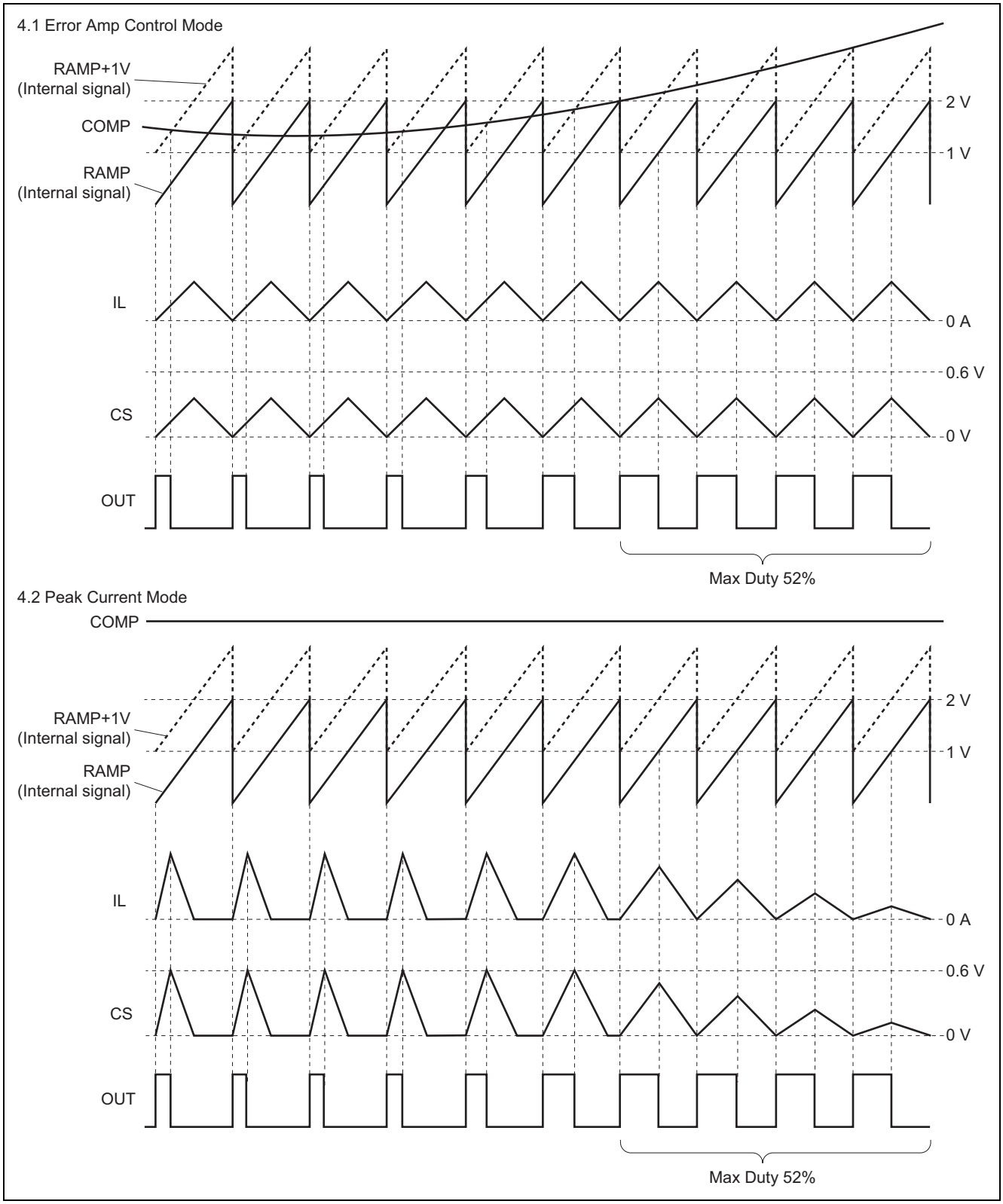

Package Dimensions

JEITA Package Code	RENESAS Code	Previous Code	MASS[Typ.]
P-SOP8-3.94x4.93-1.27	PRSP0008DJ-A	—	0.073g

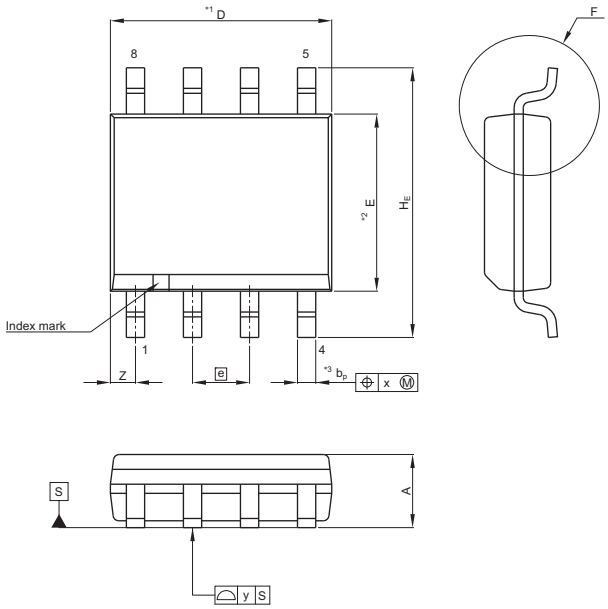

NOTE)
1. DIMENSIONS"*1 (Nom)"AND"*2" DO NOT INCLUDE MOLD FLASH.
2. DIMENSION"*3"DOES NOT INCLUDE TRIM OFFSET.

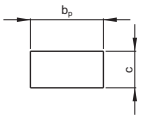

Terminal cross section
(Ni/Pd/Au plating)

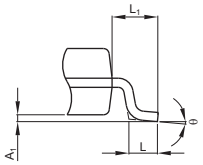

Detail F

Reference Symbol	Dimension in Millimeters		
	Min	Nom	Max
D	4.80	4.93	4.98
E	3.81	3.94	3.99
A_2	—	1.47	—
A_1	0.10	0.15	0.25
A	—	—	1.73
b_p	0.35	0.41	0.49
b_1	—	—	—
c	0.19	0.20	0.25
c_1	—	—	—
θ	0°	—	8°
H_E	5.84	5.99	6.20
e	—	1.27	—
x	—	—	0.25
y	—	—	0.10
Z	—	0.56	—
L	0.41	0.64	0.89
L_1	—	1.03	—

Notice

1. All information included in this document is current as of the date this document is issued. Such information, however, is subject to change without any prior notice. Before purchasing or using any Renesas Electronics products listed herein, please confirm the latest product information with a Renesas Electronics sales office. Also, please pay regular and careful attention to additional and different information to be disclosed by Renesas Electronics such as that disclosed through our website.
2. Renesas Electronics does not assume any liability for infringement of patents, copyrights, or other intellectual property rights of third parties by or arising from the use of Renesas Electronics products or technical information described in this document. No license, express, implied or otherwise, is granted hereby under any patents, copyrights or other intellectual property rights of Renesas Electronics or others.
3. You should not alter, modify, copy, or otherwise misappropriate any Renesas Electronics product, whether in whole or in part.
4. Descriptions of circuits, software and other related information in this document are provided only to illustrate the operation of semiconductor products and application examples. You are fully responsible for the incorporation of these circuits, software, and information in the design of your equipment. Renesas Electronics assumes no responsibility for any losses incurred by you or third parties arising from the use of these circuits, software, or information.
5. When exporting the products or technology described in this document, you should comply with the applicable export control laws and regulations and follow the procedures required by such laws and regulations. You should not use Renesas Electronics products or the technology described in this document for any purpose relating to military applications or use by the military, including but not limited to the development of weapons of mass destruction. Renesas Electronics products and technology may not be used for or incorporated into any products or systems whose manufacture, use, or sale is prohibited under any applicable domestic or foreign laws or regulations.
6. Renesas Electronics has used reasonable care in preparing the information included in this document, but Renesas Electronics does not warrant that such information is error free. Renesas Electronics assumes no liability whatsoever for any damages incurred by you resulting from errors in or omissions from the information included herein.
7. Renesas Electronics products are classified according to the following three quality grades: "Standard", "High Quality", and "Specific". The recommended applications for each Renesas Electronics product depends on the product's quality grade, as indicated below. You must check the quality grade of each Renesas Electronics product before using it in a particular application. You may not use any Renesas Electronics product for any application categorized as "Specific" without the prior written consent of Renesas Electronics. Further, you may not use any Renesas Electronics product for any application for which it is not intended without the prior written consent of Renesas Electronics. Renesas Electronics shall not be in any way liable for any damages or losses incurred by you or third parties arising from the use of any Renesas Electronics product for an application categorized as "Specific" or for which the product is not intended where you have failed to obtain the prior written consent of Renesas Electronics. The quality grade of each Renesas Electronics product is "Standard" unless otherwise expressly specified in a Renesas Electronics data sheets or data books, etc.
   - "Standard": Computers; office equipment; communications equipment; test and measurement equipment; audio and visual equipment; home electronic appliances; machine tools; personal electronic equipment; and industrial robots.
   - "High Quality": Transportation equipment (automobiles, trains, ships, etc.); traffic control systems; anti-disaster systems; anti-crime systems; safety equipment; and medical equipment not specifically designed for life support.
   - "Specific": Aircraft; aerospace equipment; submersible repeaters; nuclear reactor control systems; medical equipment or systems for life support (e.g. artificial life support devices or systems), surgical implantations, or healthcare intervention (e.g. excision, etc.), and any other applications or purposes that pose a direct threat to human life.
8. You should use the Renesas Electronics products described in this document within the range specified by Renesas Electronics, especially with respect to the maximum rating, operating supply voltage range, movement power voltage range, heat radiation characteristics, installation and other product characteristics. Renesas Electronics shall have no liability for malfunctions or damages arising out of the use of Renesas Electronics products beyond such specified ranges.
9. Although Renesas Electronics endeavors to improve the quality and reliability of its products, semiconductor products have specific characteristics such as the occurrence of failure at a certain rate and malfunctions under certain use conditions. Further, Renesas Electronics products are not subject to radiation resistance design. Please be sure to implement safety measures to guard them against the possibility of physical injury, and injury or damage caused by fire in the event of the failure of a Renesas Electronics product, such as safety design for hardware and software including but not limited to redundancy, fire control and malfunction prevention, appropriate treatment for aging degradation or any other appropriate measures. Because the evaluation of microcomputer software alone is very difficult, please evaluate the safety of the final products or system manufactured by you.
10. Please contact a Renesas Electronics sales office for details as to environmental matters such as the environmental compatibility of each Renesas Electronics product. Please use Renesas Electronics products in compliance with all applicable laws and regulations that regulate the inclusion or use of controlled substances, including without limitation, the EU RoHS Directive. Renesas Electronics assumes no liability for damages or losses occurring as a result of your noncompliance with applicable laws and regulations.
11. This document may not be reproduced or duplicated, in any form, in whole or in part, without prior written consent of Renesas Electronics.
12. Please contact a Renesas Electronics sales office if you have any questions regarding the information contained in this document or Renesas Electronics products, or if you have any other inquiries.

(Note 1) "Renesas Electronics" as used in this document means Renesas Electronics Corporation and also includes its majority-owned subsidiaries.

(Note 2) "Renesas Electronics product(s)" means any product developed or manufactured by or for Renesas Electronics.

RENESAS

SALES OFFICES Renesas Electronics Corporation http://www.renesas.com

Refer to "http://www.renesas.com/" for the latest and detailed information.

Renesas Electronics America Inc.
2880 Scott Boulevard Santa Clara, CA 95050-2554, U.S.A.
Tel: +1-408-588-6000, Fax: +1-408-588-6130

Renesas Electronics Canada Limited
1101 Nicholson Road, Newmarket, Ontario L3Y 9C3, Canada
Tel: +1-905-898-5441, Fax: +1-905-898-3220

Renesas Electronics Europe Limited
Dukes Meadow, Millboard Road, Bourne End, Buckinghamshire, SL8 5FH, U.K
Tel: +44-1628-585-100, Fax: +44-1628-585-900

Renesas Electronics Europe GmbH
Arcadiastrasse 10, 40472 Düsseldorf, Germany
Tel: +49-211-65030, Fax: +49-211-6503-1327

Renesas Electronics (China) Co., Ltd.
7th Floor, Quantum Plaza, No.27 ZhiChunLu Haidian District, Beijing 100083, P.R.China
Tel: +86-10-8235-1155, Fax: +86-10-8235-7679

Renesas Electronics (Shanghai) Co., Ltd.
Unit 204, 205, AZIA Center, No.1233 Lujiazui Ring Rd., Pudong District, Shanghai 200120, China
Tel: +86-21-5877-1818, Fax: +86-21-6887-7858 / -7898

Renesas Electronics Hong Kong Limited
Unit 1601-1613, 16/F., Tower 2, Grand Century Place, 193 Prince Edward Road West, Mongkok, Kowloon, Hong Kong
Tel: +852-2886-9318, Fax: +852 2886-9022/9044

Renesas Electronics Taiwan Co., Ltd.
13F, No. 363, Fu Shing North Road, Taipei, Taiwan
Tel: +886-2-8175-9600, Fax: +886 2-8175-9670

Renesas Electronics Singapore Pte. Ltd.
1 harbourFront Avenue, #06-10, keppel Bay Tower, Singapore 098632
Tel: +65-6213-0200, Fax: +65-6278-8001

Renesas Electronics Malaysia Sdn.Bhd.
Unit 906, Block B, Menara Amcorp, Amcorp Trade Centre, No. 18, Jln Persiaran Barat, 46050 Petaling Jaya, Selangor Darul Ehsan, Malaysia
Tel: +60-3-7955-9390, Fax: +60-3-7955-9510

Renesas Electronics Korea Co., Ltd.
11F., Samik Lavied' or Bldg., 720-2 Yeoksam-Dong, Kangnam-Ku, Seoul 135-080, Korea
Tel: +82-2-558-3737, Fax: +82-2-558-5141

© 2011 Renesas Electronics Corporation. All rights reserved.

Colophon 1.1