Features

Switching Regulator

- Efficiency up to 93%, no need for heatsinks
- High voltage input range, up to 50V
- Short Circuit Protection, Thermal Shutdown
- All-in-one solution, no external components required

RECOM
DC/DC Converter

R-78HB/W

0.5 AMP SIP3 Wired Single Output

3 YEAR Warranty

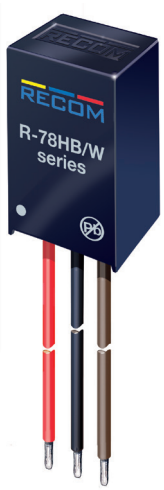

Description

The R-78HBxx/W-Series high efficiency, high input voltage switching regulators are ideally suited to replace 78xx linear regulators. The efficiency of up to 93% means that very little energy is wasted as heat so there is no need for any heat sinks with their additional space and mounting costs. A wide input voltage range allows the full stored energy utilization of standard 12, 24 and 36V batteries as well as COB LED drivers. No external components are required to make a complete regulated, short-circuit protected supply. A built-in protection diode allows high capacitive loads. Typical applications include Auxiliary fan CV power supplies powered from CC LED drivers, industrial, aerospace and battery powered applications.

Selection Guide

Part Number	Input Voltage Range [2] (VDC)	Output Voltage (VDC)	Output Current (A)	Efficiency typ @ min Vin. (%)	Max. Capacitive Load [1] (µF)
R-78HB5.0-0.5/W	9-72	5.0	0.5	86	100/6800
R-78HB12-0.5/W	17-72	12	0.5	93	100/6800

Notes:

Note1: with normal start-up time an no external components = 100µF
with <1S start-up time = 6800µF

Specifications (measured at TA= 25°C, full load, nominal input voltage and after warm-up)

BASIC CHARACTERISTICS				
Parameter	**Condition**	**Min.**	**Typ.**	**Max.**
Input Voltage Range [2]	5Vout 12Vout	9VDC 17VDC	48VDC 48VDC	72VDC 72VDC
Short Circuit Input Current			15mA	25mA
Quiescent Current	Vin = 48VDC, 10% load	1mA		5mA
Internal Power Dissipation			0.65W	
Operating Frequency Range	full load	120kHz		800kHz
Efficiency				see Selection Guide
Minimum Load [3]		10mA		
Output Ripple and Noise			20mVp-p	60mVp-p

Typical Application Circuit

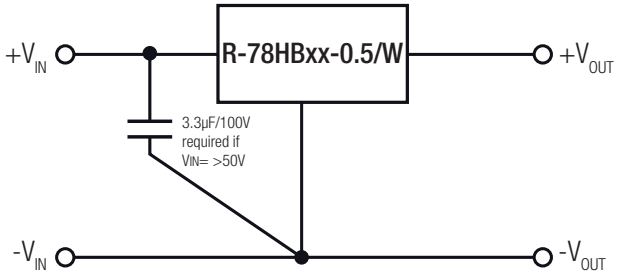

Notes:

Note2: The converter has built in soft start circuit. Rapidly changing the input voltage from $V_{IN_{min}}$ to $V_{IN_{max}}$ can bypass this circuit and damage the converter.

Note3: Operation under no load will not damage the devices, however they may not meet all specifications. A minimum load of 10mA is recommended.

continued on next page

IEC60950-1 Certified
EN60950-1 Certified
EN55022 Certified

Specifications (measured at T_A= 25°C, full load, nominal input voltage and after warm-up)

Efficiency vs. Load

R-78HB5.0-0.5/W

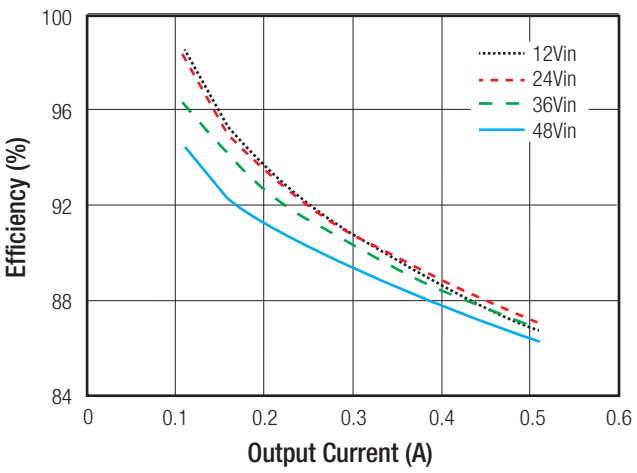

R-78HB12-0.5/W

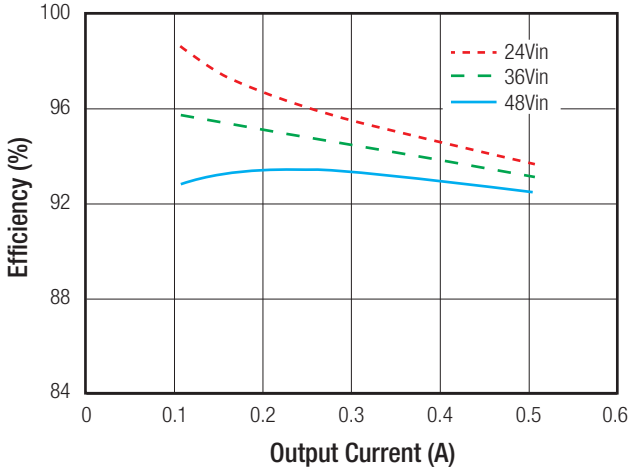

REGULATIONS		
Parameter	**Condition**	**Value**
Output Voltage Accuracy	100% load	±2% typ. / ±3% max.
Line Voltage Regulation	Vin= min. to max., full load	0.4% typ. / 1% max.
Load Voltage Regulation	10% to 100% load	0.3% typ. / 0.6% max.
Dynamic Load Stability	with 100µF output Capacitor, 100% <-> 50% load	±75mV typ. / ±100mV max.

PROTECTIONS		
Parameter	**Condition**	**Value**
Internal Input Filter		1µF Cpacaitor
Short Circuit Protection (SCP)		continuous, automatic recovery

Optional Protection Circuit

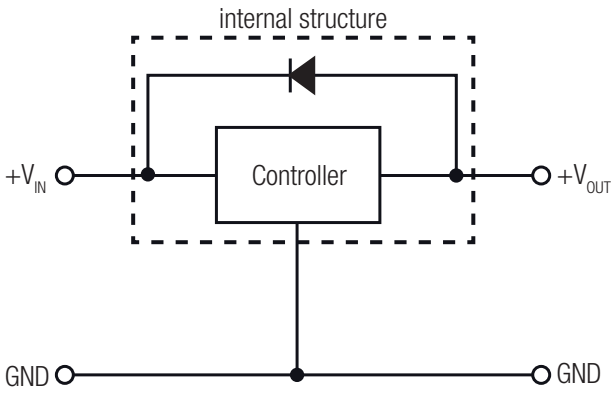

Specifications (measured at T_A= 25°C, full load, nominal input voltage and after warm-up)

ENVIRONMENTAL		
Parameter	**Condition**	**Value**
Operating Temperature Range	with derating (see graph)	-40°C to +85°C
Maximum Case Temperature		+100°C
Case Thermal Impedance		55°C/W
MTBF	MIL-HDBK 217F, +25°C MIL-HDBK 217F, +71°C	7395 x 10^3 hours 1242 x 10^3 hours

Derating Graph

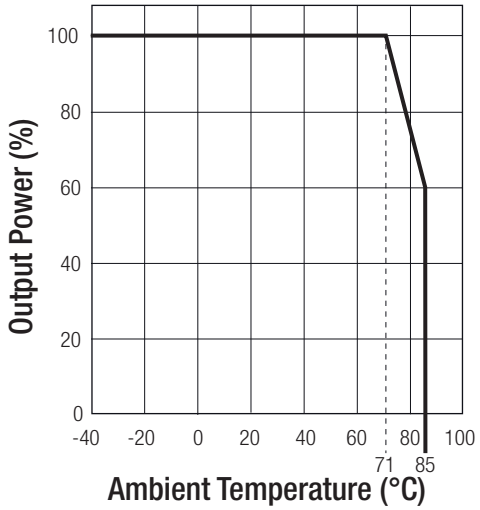

SAFETY AND CERTIFICATIONS		
Certificate Type	**Report / File Number**	**Standard**
IEC/EN General Safety	SPCLVD1407030-1	IEC/EN-60950-1, 2nd Edition
EMI Compliance	**Condition**	**Standard / Criterion**
EMC Conducted and Radiated		EN55022, Class B
ESD		EN61000-4-2, Criteria A

DIMENSION and PHYSICAL CHARACTERISTICS		
Parameter	**Type**	**Value**
Case Material Potting Material		non-conductive black plastic (UL94V-0) epoxy (UL94V-0)
Package Dimension (LxWxH)		12.1 x 9.7 x 24.0mm
Package Weight		4.5g

continued on next page

Specifications (measured at T_A= 25°C, full load, nominal input voltage and after warm-up)

Dimension Drawing (mm)

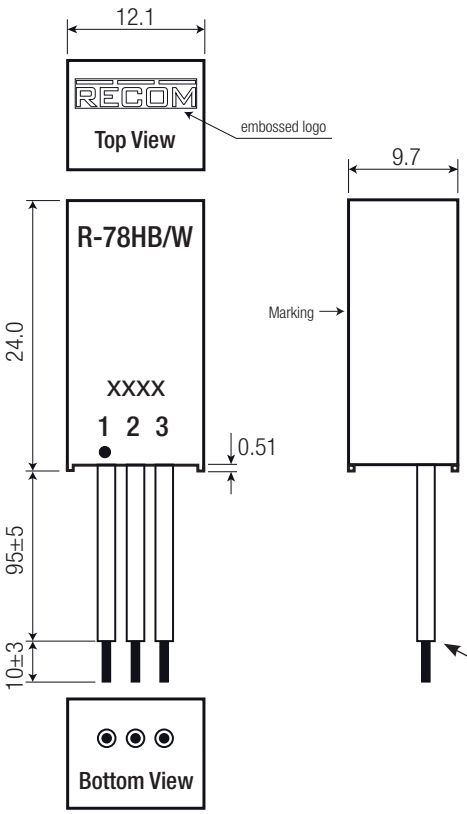

Connection

Wired Color	Type	Wire Composition	Function
1, red	UL-1430, AWG22	17/0.16	+Vin
2, black	UL-1430, AWG22	17/0.16	GND
3, brown	UL-1430, AWG22	17/0.16	+Vout

Tolerance: xx.x= ±0.5mm
xx.xx= ±0.35mm

Wire Composition

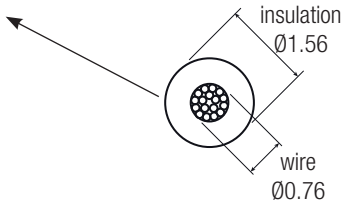

APPLICATION

Standard Application

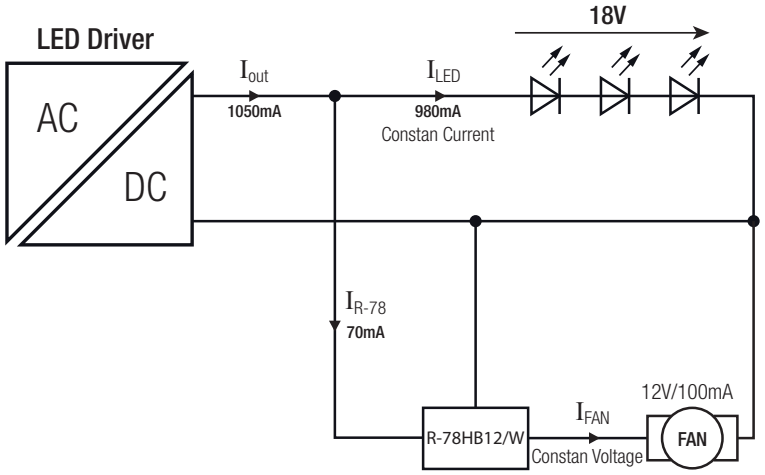

PACKAGING INFORMATION

Packaging Dimension (LxWxH)	cardboard box	140.0 x 130.0 x 65.0mm
Packaging Quantity		25pcs
Storage Termperature Range		-55°C to +125°C
Storage Humidity	non-condensing	95%, RH max.

The product information and specifications are subject to change without prior notice. RECOM products are not authorized for use in safety-critical applications (such as life support) without RECOM's explicit written consent. A safety-critical application is defined as an application where a failure of a RECOM product may reasonably be expected to endanger or cause loss of life, inflict bodily harm or damage property. The buyer shall indemnify and hold harmless RECOM, its affiliated companies and its representatives against any damage claims in connection with the unauthorized use of RECOM products in such safety-critical applications.