SURFACE MOUNT LED LAMP
STANDARD BRIGHT RIGHT ANGLE

QTLP610C-2 HER
QTLP610C-3 Yellow
QTLP610C-4 Green
QTLP610C-7 AlGaAs Red
QTLP610C-B Blue

PACKAGE DIMENSIONS

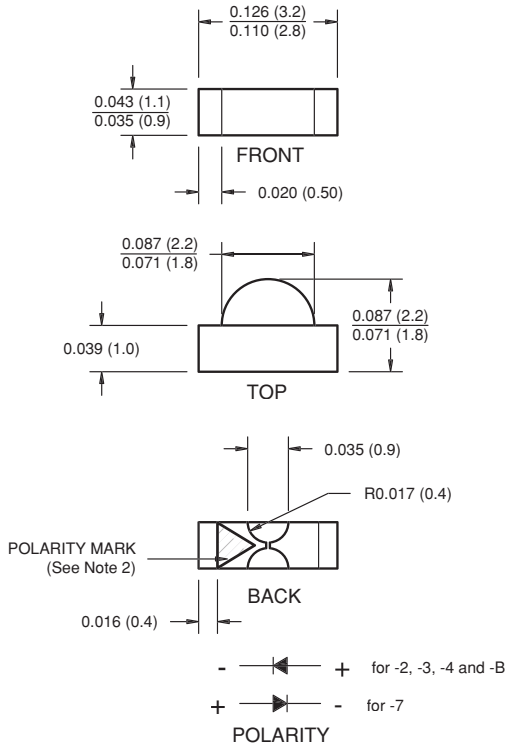

NOTE:
1. Dimensions for all drawings are in inches (mm).
2. Cathode for -2, -3, -4 and B. Anode for -7.

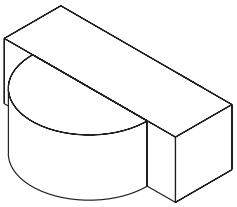

APPLICATIONS

- LCD edge-lighting
- Edge card edge-lighting

DESCRIPTION

These right angle surface mount chip LEDs emit light in the lateral direction. Small size and wide viewing angle make these LEDs ideal choices for status indication in consumer electronics, industrial control and other applications.

FEATURES

- Small footprint - 3.0(L) X 2.0(W) X 1.0(H) mm
- Wide viewing angle of 120°
- Water clear optics
- Moisture-proof packaging
- Available in 0.315" (8mm) width tape on 7" (178mm) diameter reel; 2,000 units per reel

© 2003 Fairchild Semiconductor Corporation

FAIRCHILD
SEMICONDUCTOR®

SURFACE MOUNT LED LAMP
STANDARD BRIGHT RIGHT ANGLE

QTLP610C-2 HER
QTLP610C-3 Yellow
QTLP610C-4 Green
QTLP610C-7 AlGaAs Red
QTLP610C-B Blue

ABSOLUTE MAXIMUM RATINGS (T_A =25°C Unless otherwise specified)

Parameter	Symbol	QTLP610C					Units
		-2	-3	-4	-7	-B	
Continuous Forward Current	I_F	30	30	30	30	30	mA
Peak Forward Current (f = 1.0 KHz, Duty Factor = 1/10)	I_{FM}	160	160	160	180	100	mA
Reverse Voltage (I_R = 10 µA)	V_R	5	5	5	5	5	V
Power Dissipation	P_D	84	84	84	72	135	mW
Operating Temperature	T_{OPR}	-40 to +85					°C
Storage Temperature	T_{STG}	-40 to +90					°C
Lead Soldering Time	T_{SOL}	260 for 5 sec					°C

ELECTRICAL / OPTICAL CHARACTERISTICS (T_A =25°C)

Part Number	Symbol	QTLP610C					Condition
		-2	-3	-4	-7	-B	
Luminous Intensity (mcd)							
Minimum	I_V	3	3	5	10	15	I_F = 20mA
Typical		7	7	10	20	25	
Forward Voltage (V)							
Maximum	V_F	2.8	2.8	2.8	2.4	4.5	I_F = 20mA
Typical		2.0	2.0	2.1	1.9	3.8	
Wavelength (nm)							
Peak	λ_P	635	585	565	660	430	I_F = 20mA
Dominant	λ_D	630	590	570	645	465	
Spectral Line Half Width (nm)	$\Delta\lambda$	45	35	30	20	65	I_F = 20mA
Viewing Angle (°)	$2\Theta_{1/2}$	120	120	120	120	120	I_F = 20mA

© 2003 Fairchild Semiconductor Corporation

SURFACE MOUNT LED LAMP
STANDARD BRIGHT RIGHT ANGLE

QTLP610C-2 HER
QTLP610C-3 Yellow
QTLP610C-4 Green
QTLP610C-7 AlGaAs Red
QTLP610C-B Blue

TYPICAL PERFORMANCE CURVES

Fig. 1 Forward Current vs. Forward Voltage

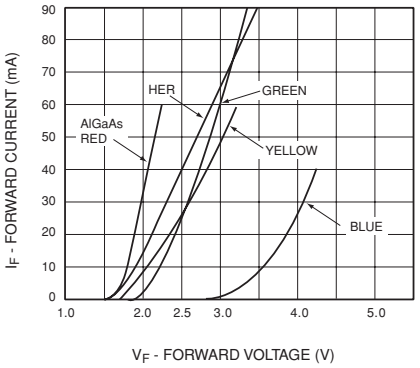

Fig. 2 Relative Luminous Intensity vs. DC Forward Current

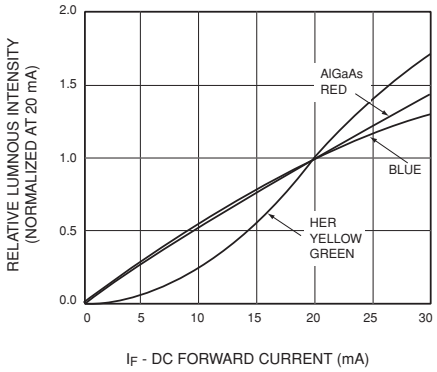

Fig. 3 Relative Intensity vs. Peak Wavelength

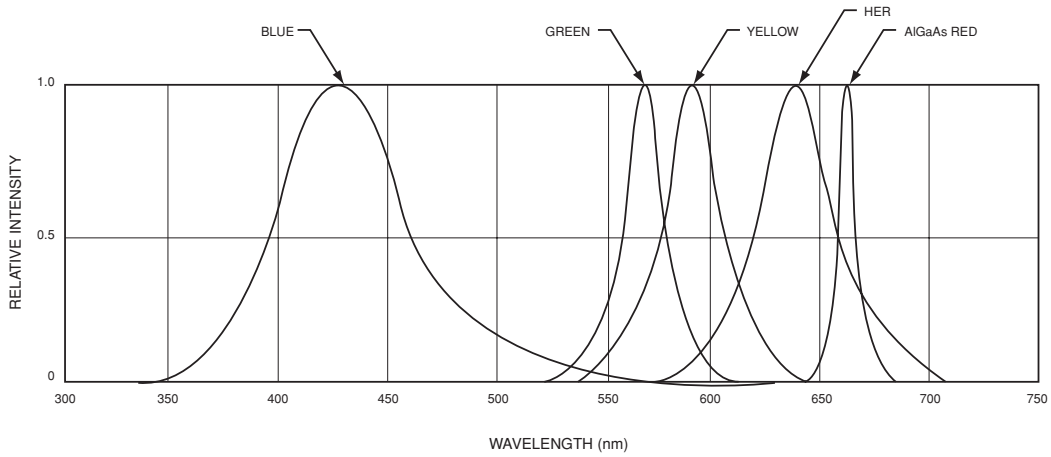

Fig.4 Radiation Diagram

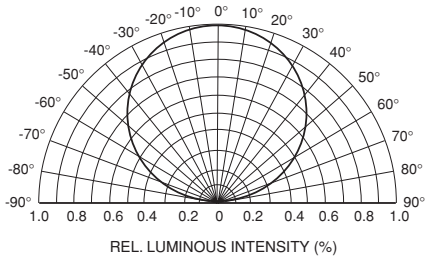

Fig.5 Maximum Forward Current vs. Ambient Temperature

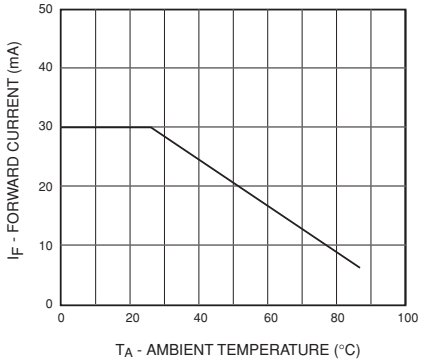

© 2003 Fairchild Semiconductor Corporation

SURFACE MOUNT LED LAMP
STANDARD BRIGHT RIGHT ANGLE

QTLP610C-2 HER
QTLP610C-3 Yellow
QTLP610C-4 Green
QTLP610C-7 AlGaAs Red
QTLP610C-B Blue

RECOMMENDED PRINTED CIRCUIT BOARD PATTERN

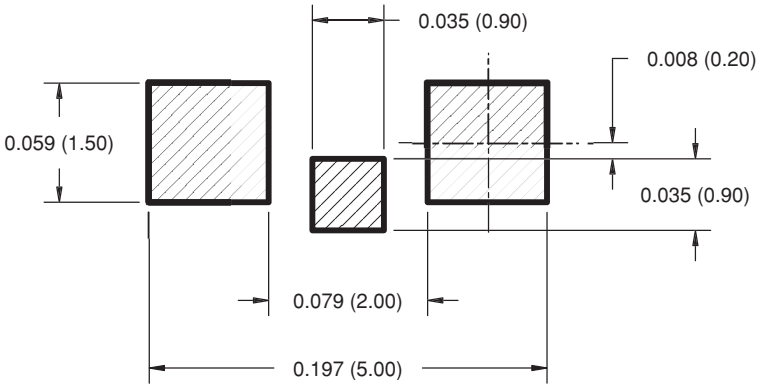

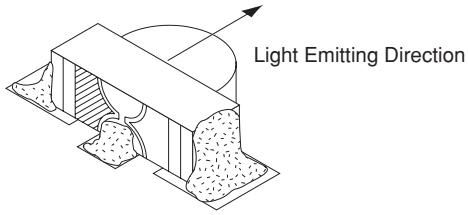

Mounting Example

RECOMMENDED IR REFLOW SOLDERING PROFILE

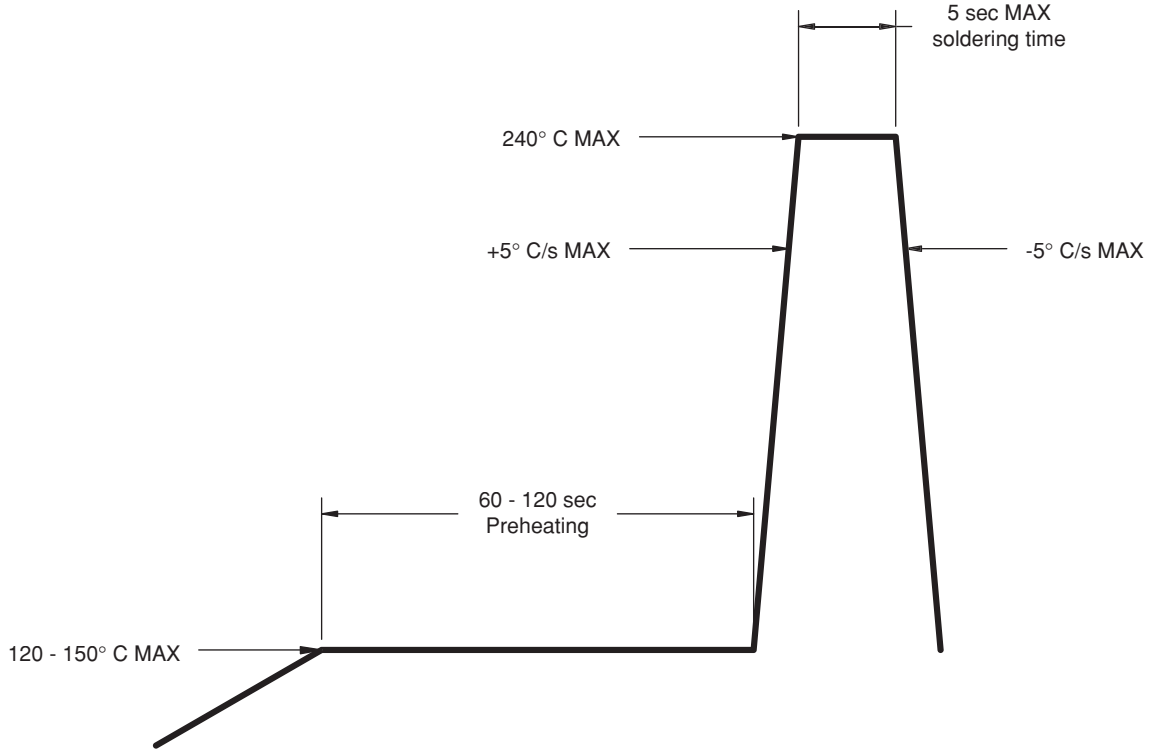

© 2003 Fairchild Semiconductor Corporation

SURFACE MOUNT LED LAMP
STANDARD BRIGHT RIGHT ANGLE

QTLP610C-2 HER
QTLP610C-3 Yellow
QTLP610C-4 Green
QTLP610C-7 AlGaAs Red
QTLP610C-B Blue

TAPE AND REEL DIMENSIONS

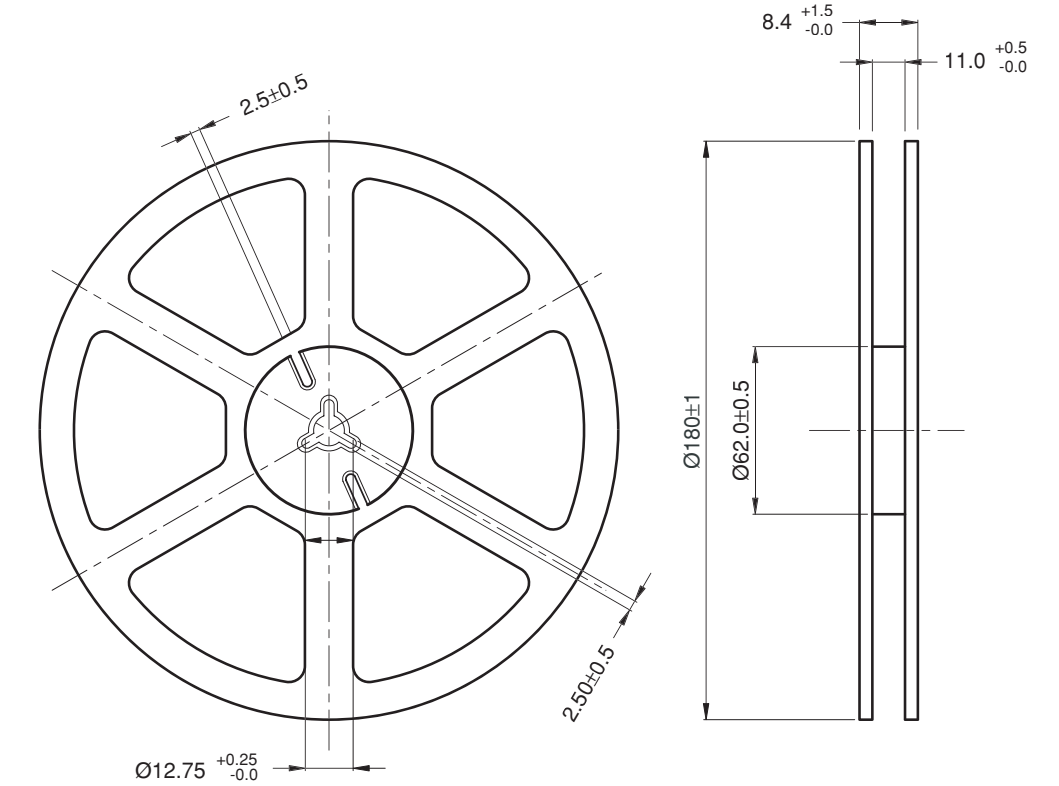

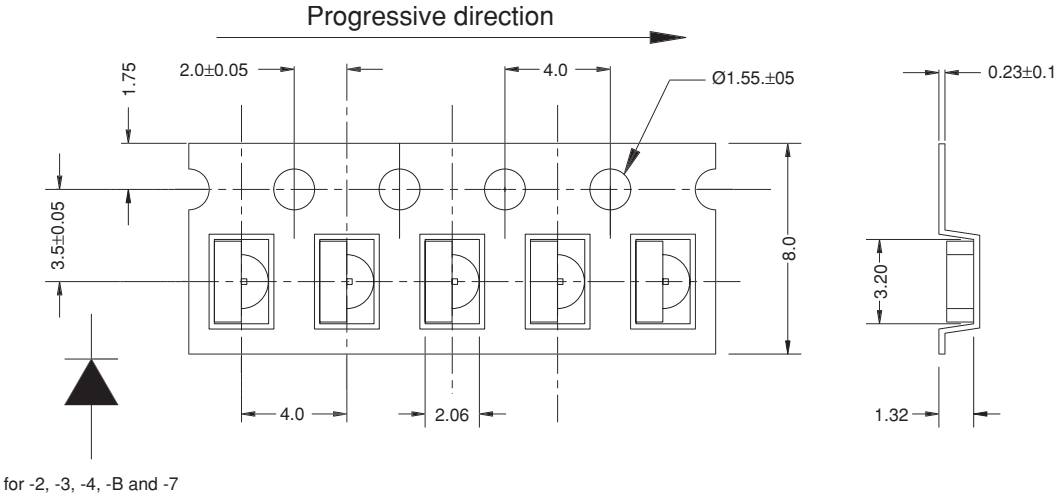

Dimensional tolerance is ± 0.1mm unless otherwise specified
Angle: ± 0.5
Unit: mm

© 2003 Fairchild Semiconductor Corporation

SURFACE MOUNT LED LAMP
STANDARD BRIGHT RIGHT ANGLE

QTLP610C-2 HER
QTLP610C-3 Yellow
QTLP610C-4 Green
QTLP610C-7 AlGaAs Red
QTLP610C-B Blue

DISCLAIMER

FAIRCHILD SEMICONDUCTOR RESERVES THE RIGHT TO MAKE CHANGES WITHOUT FURTHER NOTICE TO ANY PRODUCTS HEREIN TO IMPROVE RELIABILITY, FUNCTION OR DESIGN. FAIRCHILD DOES NOT ASSUME ANY LIABILITY ARISING OUT OF THE APPLICATION OR USE OF ANY PRODUCT OR CIRCUIT DESCRIBED HEREIN; NEITHER DOES IT CONVEY ANY LICENSE UNDER ITS PATENT RIGHTS, NOR THE RIGHTS OF OTHERS.

LIFE SUPPORT POLICY

FAIRCHILD'S PRODUCTS ARE NOT AUTHORIZED FOR USE AS CRITICAL COMPONENTS IN LIFE SUPPORT DEVICES OR SYSTEMS WITHOUT THE EXPRESS WRITTEN APPROVAL OF THE PRESIDENT OF FAIRCHILD SEMICONDUCTOR CORPORATION. As used herein:

1. Life support devices or systems are devices or systems which, (a) are intended for surgical implant into the body, or (b) support or sustain life, and (c) whose failure to perform when properly used in accordance with instructions for use provided in the labeling, can be reasonably expected to result in a significant injury of the user.
2. A critical component in any component of a life support device or system whose failure to perform can be reasonably expected to cause the failure of the life support device or system, or to affect its safety or effectiveness.

© 2003 Fairchild Semiconductor Corporation