| Rev | AWO # | Description | Date | Appr |
|---|---|---|---|---|
| - | | RELEASED | 7/11/14 | |

APPROVED: _____

DATE: _____ TITLE: _____

QSFC6-HS-NLP-G E A6 P 0 0 C4 0 X A 0
1 2 3 4 5 6 7 8 9 10 11 12

1.SERIES NO.
2.TYPE: G=PressFit
3.GREEN OPTION:
E=RoHS
4.PORT NO:
A6=1x6
5.CONTACT TYPE:
P=Non Distribution
6.CONTACT PLATING:
0=Non Function
7.SOLDER TAILS AREA PLATING:
0=Non Function
8.TYPE OPTION:
C4=QSFP Cage
9.SHELL PLATING/TYPE:
0=Non Plating/Behind Bezel
10.PROCESS OPTION:
1=W/O Light Pipe,W/PCI Heat Sink(4.2mm)
2=W/O Light Pipe,W/SAN Heat Sink(6.5mm)
3=W/O Light Pipe,W/Networking Heat Sink(13.5mm)
11.PACKAGE OPTION:
A=Tray
12.INSULATOR COLOR:
0=Non Function

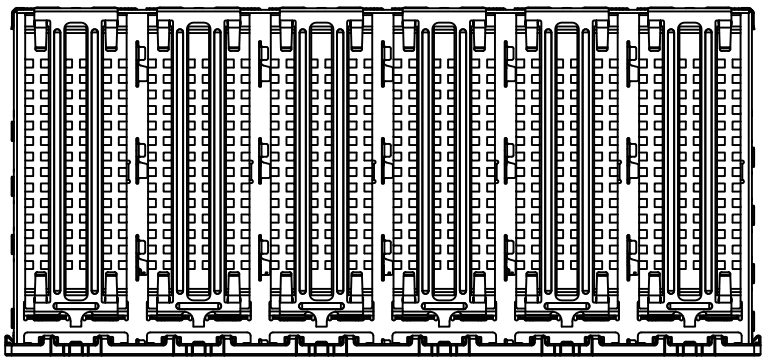

2. SPACING BETWEEN GAGES ON THE SAME PC BOARD, TO BE SPECIFIED BY CUSTOMER, MUST COMPLY WITH MINIMUM DIMENSIONS SHOWN.
3. DIMENSION F IS THE NOMINAL THICKNESS OF CUSTOMER SUPPLIED PC BOARD.
MINIMUM SINGLE SIDED PC BOARD THICKNESS: 1.45mm
MINIMUM DOUBLE SIDED PC BOARD THICKNESS: 3.0mm PER QSFP
4. DIMENSION APPLIES WITH MODULE INSERTED IN CAGE.
5. MATES WITH QSFP MSA COMPATIBLE TRANSCEIVER.
6. INSIDE SURFACE OF CASKET WHEN FULLY COMPRESSED.
7. SURFACE TRACES PERMITTED WITHIN THIS AREA EXCEPT WHERE CAGE STANDOFFS, SHOWN IN DETAIL S CONTACT PC BOARD.
8. EMI SPRING FINISH: CLEAR PASSIVATION
FRONT FLANGE FINISH: OVER 8um MIN COPPER, OVER 8um MIN NICKEL
HEAT SINK FINISH: CLEAR PASSIVATION
HEAT SINK CLIP FINISH: CLEAR PASSIVATION
9. CAGE BASED ON STD. SFF-8436 Rev 3.5.
10. THIS PRODUCT COMPLY TO ROHS DIRECTIVE 2002/95/EC.

| | | |
|---|---|---|
| 22.10mm | NETWORKING | QSFC6-HS-NLP-GEA6P00C403A0 |
| 15.10mm | SAN | QSFC6-HS-NLP-GEA6P00C402A0 |
| 12.80mm | PCI | QSFC6-HS-NLP-GEA6P00C401A0 |
| A | HEAT SINK PROFILE | PART NO. |

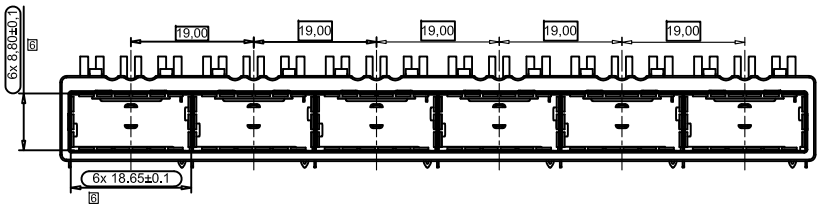


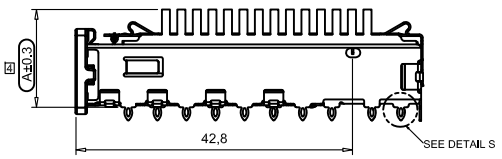


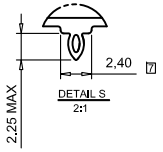


SPECIFICATIONS:
Material:
Cage Up/Cover: Copper Alloy
EMI spring: Stainless Steel, Clear Passivation
Front flange: Zinc Alloy, Nickel plated
Heat sink: Aluminum, Clear Passivation
Heat sink clip: Stainless Steel, Clear Passivation
Environmental:
Lead free, RoHS complaint

RoHS COMPLIANT

UNLESS OTHERWISE SPECIFIED
ALL DIMENSIONS ARE MILLIMETERS
TOLERANCES: EXCEPT AS NOTED
INCHES: .X ± .25, .XX ± .15, .XXX ± .05
HOLES: Ø.XX ±.013

| APPROVALS | | DATE |
|---|---|---|
| DRAWN | HR | 7/11/14 |
| CHECKED | TW | 7/11/14 |
| APPROVED | | |


**ADAM TECH**
909 Rahway Avenue, Union, NJ 07083
Phone: 908-687-5000 Fax: 908-687-5710


TITLE: QSFP CAGE 1X6 PORTS, DOUBLE HEAT SINK, NO LIGHT PIPE

| SIZE | PART NO. | REV. |
|---|---|---|
| X | QSFC6-HS-NLP-X | - |

REF: S00013T | SCALE: NTS | SHEET 1 OF 4

| Rev | AWO # | Description | Date | Appr |
|---|---|---|---|---|
| - | | RELEASED | 7/11/14 | |

APPROVED: _____

DATE:

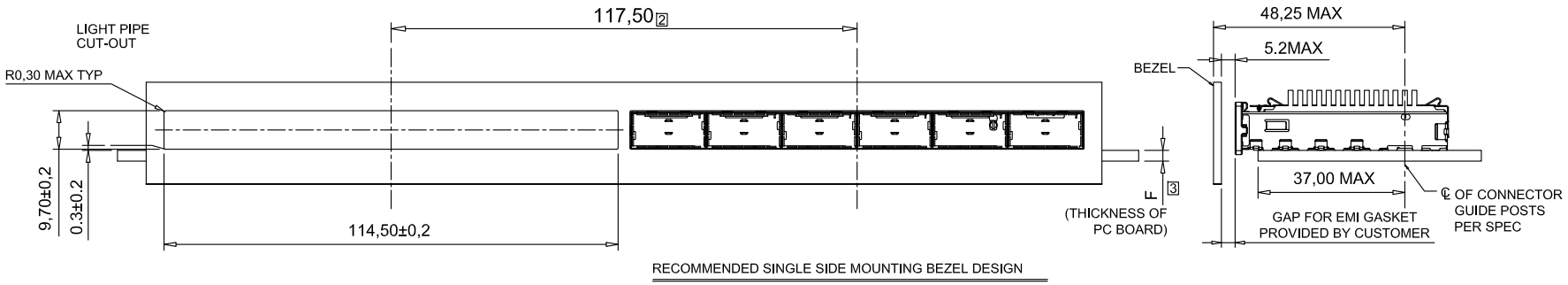


RECOMMENDED SINGLE SIDE MOUNTING BEZEL DESIGN

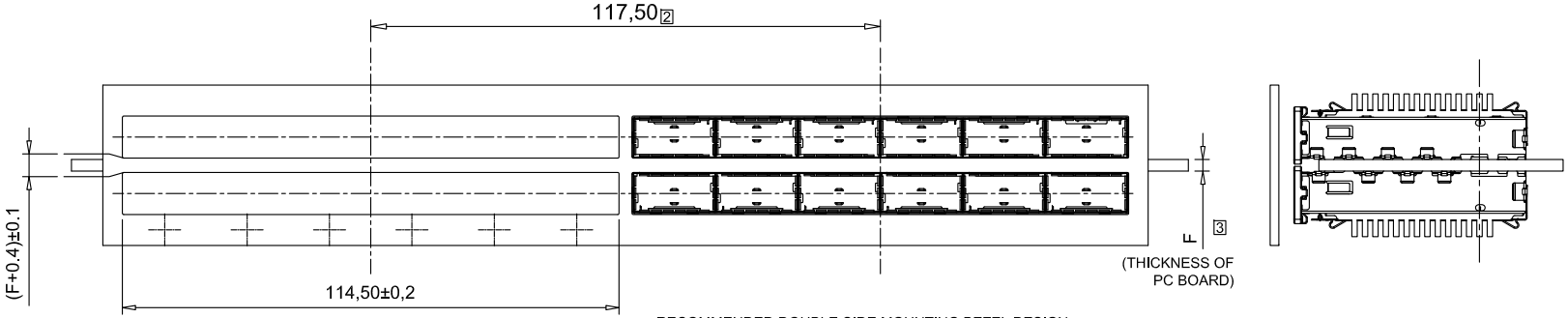


RECOMMENDED DOUBLE SIDE MOUNTING BEZEL DESIGN

NOTES:(CONTINUE)

11. DATUM X & Y ARE ESTABLISHED BY THE CUSTOMER'S FIDUCIAL
12. DATUM A IS THE TOP SURFACE OF THE HOST BOARD
13. LOCATION OF THE EDGE OF PCB IS APPLICATION SPECIFIC
14. BASELINE FOR THESE DIMENSIONS IS THE CENTER OF COMPLIANT PIN HOLE.
15. FINISHED HOLE SIZE
16. UNPLATED THRU HOLE.
17. CENTERLINE OF PAD

UNLESS OTHERWISE SPECIFIED
ALL DIMENSIONS ARE MILLIMETERS
TOLERANCES: EXCEPT AS NOTED

| INCHES | | HOLES | |
|---|---|---|---|
| .X | ± .25 | | |
| .XX | ± .15 | Ø.XX | ±.013 |
| .XXX | ± .05 | | |

| APPROVALS | | DATE |
|---|---|---|
| DRAWN | HR | 7/11/14 |
| CHECKED | TW | 7/11/14 |
| APPROVED | | |


**ADAM TECH**
909 Rahway Avenue, Union, NJ 07083
Phone: 908-687-5000 Fax: 908-687-5710


TITLE: QSFP CAGE 1X6 PORTS, DOUBLE HEAT SINK, NO LIGHT PIPE

| SIZE | PART NO. | REV. |
|---|---|---|
| X | QSFC6-HS-NLP-X | - |

| REF: | SCALE: | SHEET |
|---|---|---|
| S00013T | NTS | 2 OF 4 |

| Rev | AWO # | Description | Date | Appr |
|---|---|---|---|---|
| - | | RELEASED | 7/11/14 | |

APPROVED: _____

DATE:

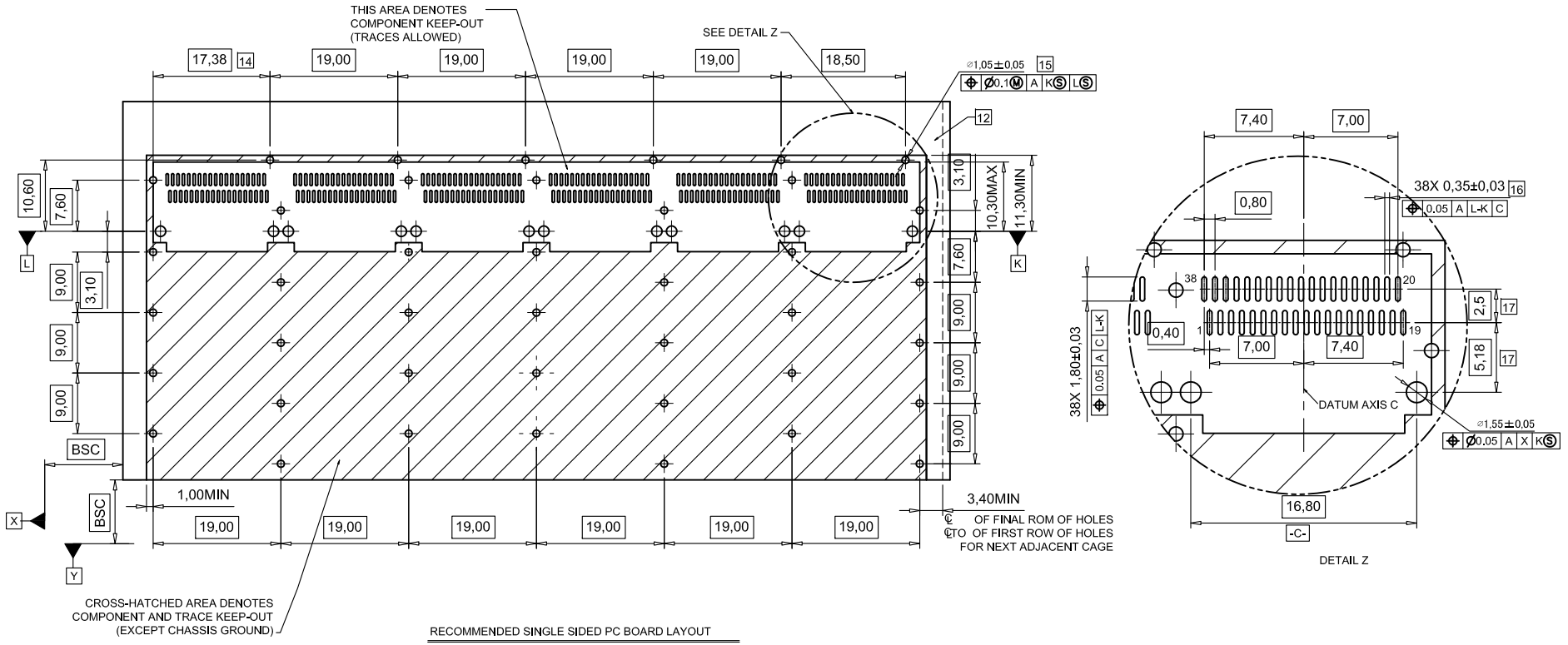


NOTES:(CONTINUE)

11. DATUM X & Y ARE ESTABLISHED BY THE CUSTOMER'S FIDUCIAL
12. DATUM A IS THE TOP SURFACE OF THE HOST BOARD
13. LOCATION OF THE EDGE OF PCB IS APPLICATION SPECIFIC
14. BASELINE FOR THESE DIMENSIONS IS THE CENTER OF COMPLIANT PIN HOLE.
15. FINISHED HOLE SIZE
16. UNPLATED THRU HOLE.
17. CENTERLINE OF PAD

UNLESS OTHERWISE SPECIFIED
ALL DIMENSIONS ARE MILLIMETERS
TOLERANCES: EXCEPT AS NOTED

| INCHES | | HOLES | |
|---|---|---|---|
| .X | ± .25 | | |
| .XX | ± .15 | Ø.XX | ±.013 |
| .XXX | ± .05 | | |

| APPROVALS | | DATE |
|---|---|---|
| DRAWN | HR | 7/11/14 |
| CHECKED | TW | 7/11/14 |
| APPROVED | | |


**ADAM TECH**
909 Rahway Avenue, Union, NJ 07083
Phone: 908-687-5000 Fax: 908-687-5710


TITLE: QSFP CAGE 1X6 PORTS, HEAT SINK, NO LIGHT PIPE

| SIZE | PART NO. | REV. |
|---|---|---|
| X | QSFC6-HS-NLP-X | - |

REF: S00013T | SCALE: NTS | SHEET 3 OF 4

| Rev | AWO # | Description | Date | Appr |
|---|---|---|---|---|
| - | | RELEASED | 7/11/14 | |

APPROVED: _____

DATE:

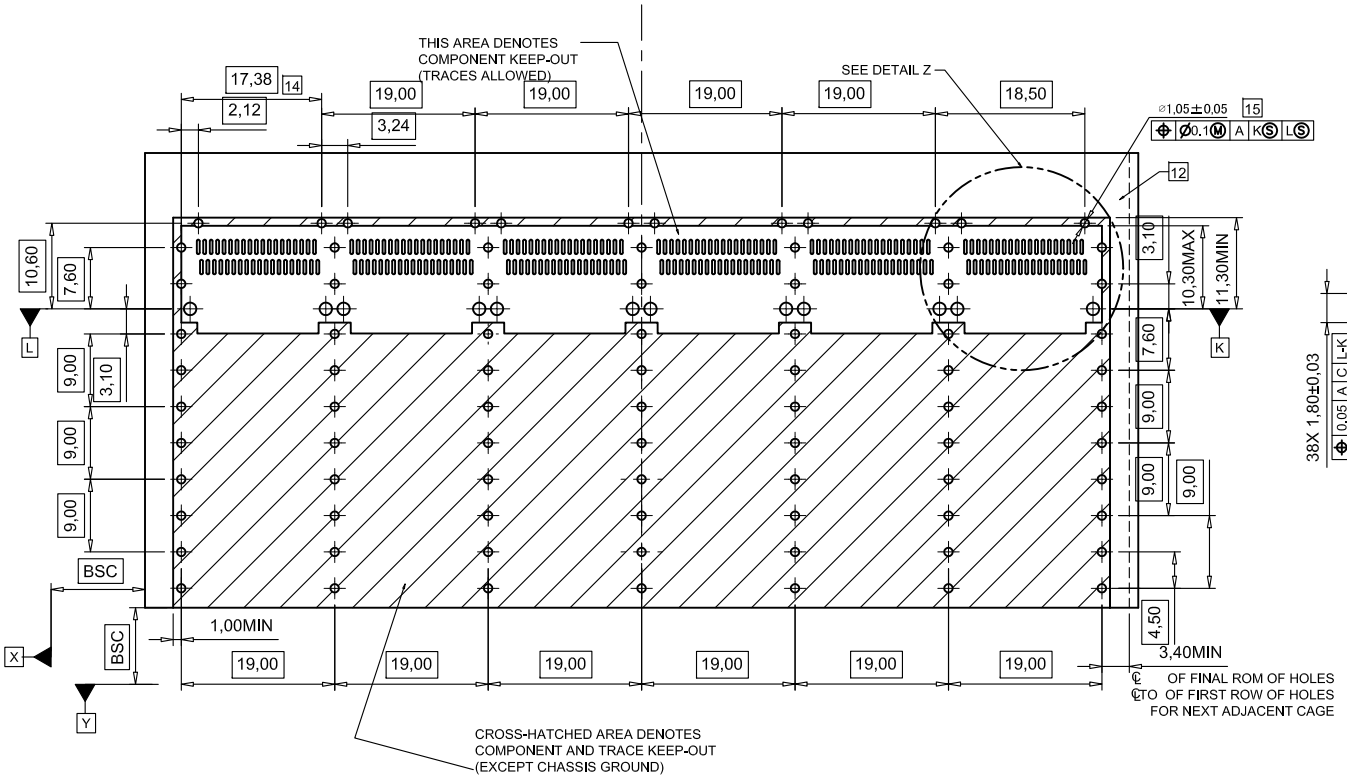


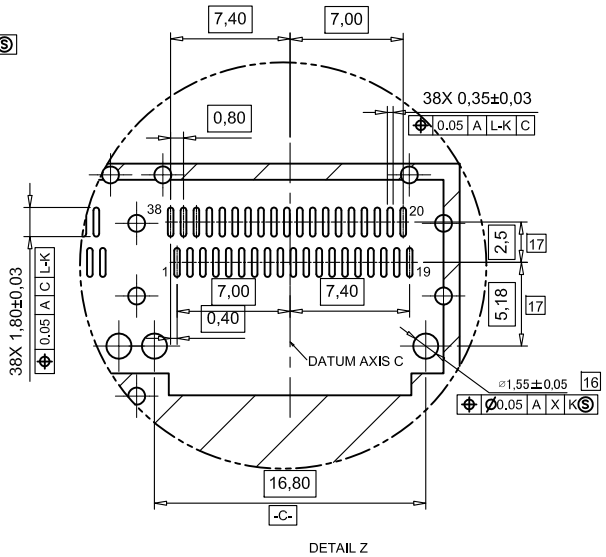


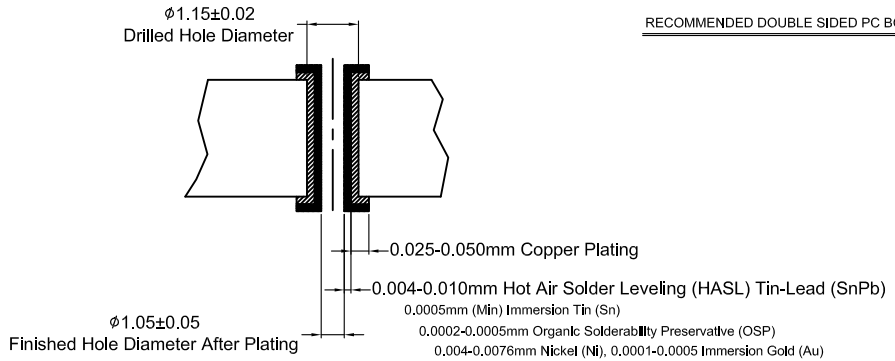


FINISHED HOLE SIZE SPECS

RECOMMENDED DOUBLE SIDED PC BOARD LAYOUT

UNLESS OTHERWISE SPECIFIED
ALL DIMENSIONS ARE MILLIMETERS
TOLERANCES: EXCEPT AS NOTED

| INCHES | | HOLES | |
|---|---|---|---|
| .X | ± .25 | | |
| .XX | ± .15 | Ø.XX | ±.013 |
| .XXX | ± .05 | | |

| APPROVALS | | DATE |
|---|---|---|
| DRAWN | HR | 7/11/14 |
| CHECKED | TW | 7/11/14 |
| APPROVED | | |


**ADAM TECH**
909 Rahway Avenue, Union, NJ 07083
Phone: 908-687-5000 Fax: 908-687-5710


TITLE: QSFP CAGE 1X6 PORTS, DOUBLE HEAT SINK, NO LIGHT PIPE

| SIZE | PART NO. | REV. |
|---|---|---|
| X | QSFC6-HS-NLP-X | - |

REF: S00013T | SCALE: NTS | SHEET 4 OF 4