QUICKSWITCH® PRODUCTS
HIGH-SPEED CMOS QUICKSWITCH
16:8 MULTIPLEXER

IDTQS32390

FEATURES:

- Enhanced N channel FET with no inherent diode to Vcc
- 16:8 multiplexer function with zero delay
- 5Ω bidirectional switches connect inputs to outputs
- Zero propagation delay, zero ground bounce
- Undershoot clamp diodes on all switch and control inputs
- Direct bidirectional connection for mux, demux
- 25Ω resistors for low noise
- Available in QSOP package

APPLICATIONS:

- Video, audio, graphics switching, muxing
- Hot-swapping, hot-docking
- Voltage translation (5V to 3.3V)

DESCRIPTION:

The QS32390 provides a 16:8 multiplexer logic switch. The QS32390 has an internal 25Ω resistor to reduce reflection noise in high-speed applications. The enable inputs connect one of two inputs to the common I/O pin, respectively. The multiplexer function can be used to select and route logic signals for zero delay, isolate bus capacitance, form crossbar switches, etc.

Mux/Demux devices provide an order of magnitude faster speed than equivalent logic devices.

The QS32390 is characterized for operation at -40°C to +85°C.

FUNCTIONAL BLOCK DIAGRAM

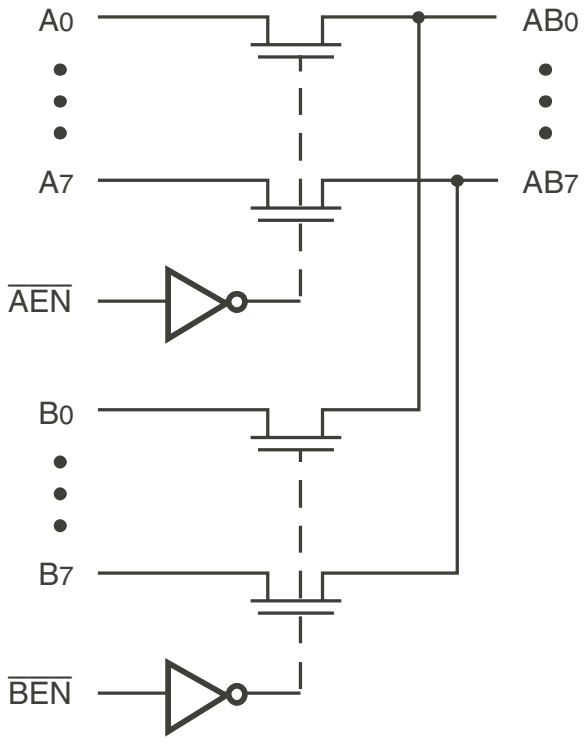

The IDT logo is a registered trademark of Integrated Device Technology, Inc.

© 2011 Integrated Device Technology, Inc.

PIN CONFIGURATION

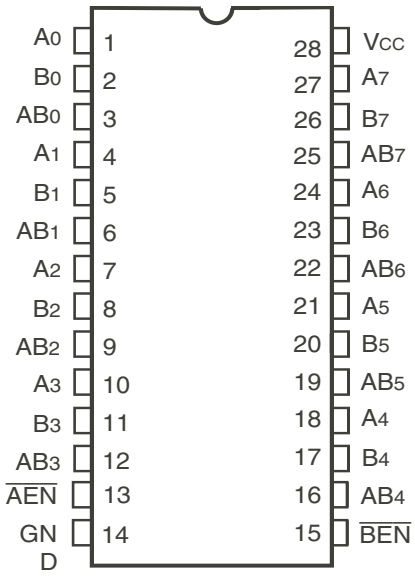

QSOP
TOP VIEW

ABSOLUTE MAXIMUM RATINGS(1)

Symbol	Description	Max	Unit
V_{TERM}(2)	Supply Voltage to Ground	–0.5 to +7	V
V_{TERM}(3)	DC Switch Voltage Vs	–0.5 to +7	V
V_{TERM}(3)	DC Input Voltage V_{IN}	–0.5 to +7	V
V_{AC}	AC Input Voltage (pulse width ≤ 20ns)	–3	V
I_{OUT}	DC Output Current	120	mA
P_{MAX}	Maximum Power Dissipation (T_A = 85°C)	0.5	W
T_{STG}	Storage Temperature	–65 to +150	°C

NOTE:
1. Stresses greater than those listed under ABSOLUTE MAXIMUM RATINGS may cause permanent damage to the device. This is a stress rating only and functional operation of the device at these or any other conditions above those indicated in the operational sections of this specification is not implied. Exposure to absolute maximum rating conditions for extended periods may affect reliability.
2. Vcc terminals.
3. All terminals except Vcc.

CAPACITANCE

(T_A = +25°C, f = 1.0MHz, V_{IN} = 0V, V_{OUT} = 0V)

Pins		Typ.	Max.(1)	Unit
Control Pins		4	5	pF
Quickswitch Channels (Switch OFF)	Demux	5	7	pF
	Mux	9	10	

NOTE:
1. This parameter is measured at characterization but not tested.

PIN DESCRIPTION

Pin Names	I/O	Description
A_0 - A_9	I/O	Bus A
B_0 - B_9	I/O	Bus B
$\overline{AEN}$, $\overline{BEN}$	I	Bus Switch Enable

FUNCTION TABLE(1)

$\overline{AEN}$	$\overline{BEN}$	A_0 - A_9	B_0 - B_9	Function
H	H	Off	Off	Disconnect
L	H	On	Off	A to AB
H	L	Off	On	B to AB
L	L	On	On	A, B to AB

NOTE:
1. H = HIGH Voltage Level
   L = LOW Voltage Level

DC ELECTRICAL CHARACTERISTICS OVER OPERATING RANGE

Following Conditions Apply Unless Otherwise Specified:
Industrial: T_A = –40°C to +85°C, V_{CC} = 5.0V ±5%

Symbol	Parameter	Test Conditions	Min.	Typ.(1)	Max.	Unit
V_{IH}	Input HIGH Level	Guaranteed Logic HIGH for Control Pins	2	—	—	V
V_{IL}	Input LOW Level	Guaranteed Logic LOW for Control Pins	—	—	0.8	V
I_{IN}	Input LeakageCurrent (Control Inputs)(2)	0V ≤ V_{IN} ≤ V_{CC}	—	—	±1	µA
I_{OZ}	Off-State Output Current (Hi-Z)	0V ≤ V_{OUT} ≤ V_{CC}, Switches OFF	—	—	±1	µA
R_{ON}(3)	Switch ON Resistance	V_{CC} = Min., V_{IN} = 0V, I_{ON} = 30mA	15	20	35	Ω
		V_{CC} = Min., V_{IN} = 2.4V, I_{ON} =15mA	15	19	40	
V_P	Pass Voltage(2)	V_{IN} = V_{CC} = 5V, I_{OUT} = -5µA	3.7	4	4.2	V

NOTES:
1. Typical values are at V_{CC} = 5.0V, T_A = 25°C.
2. Pass Voltage is guaranteed but not production tested.
3. R_{OUT} changed on March 8, 2002. See rear page for more information.

TYPICAL ON RESISTANCE vs V_{IN} AT V_{CC} = 5V

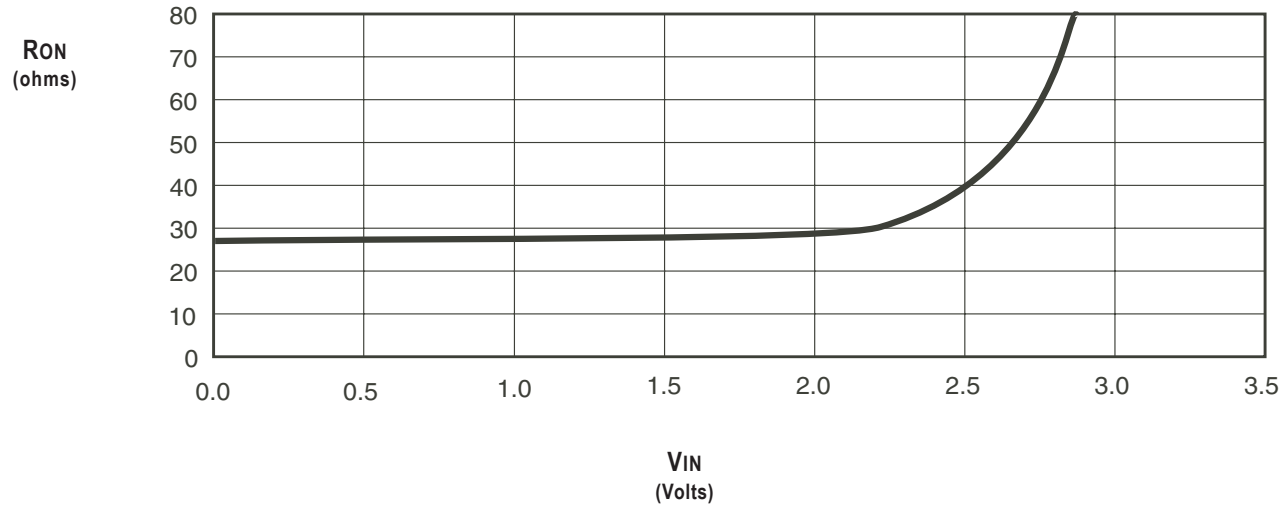

POWER SUPPLY CHARACTERISTICS

Symbol	Parameter	Test Conditions[1]	Max.	Unit
I_{CCQ}	Quiescent Power Supply Current	V_{CC} = Max., V_{IN} = GND or Vcc, f = 0	3	µA
ΔI_{CC}	Power Supply Current per Control Input HIGH [2]	V_{CC} = Max., V_{IN} = 3.4V, f = 0	1.5	mA
I_{CCD}	Dynamic Power Supply Current per MHz[3]	V_{CC} = Max., A, B, and AB pins open Control Inputs Toggling at 50% Duty Cycle	0.25	mA/MHz

NOTES:
1. For conditions shown as Min. or Max., use the appropriate values specified under DC Electrical Characteristics.
2. Per TLL driven input (V_{IN} = 3.4V, control inputs only). A, B, and AB pins do not contribute to ΔI_{CC}.
3. This current applies to the control inputs only and represents the current required to switch internal capacitance at the specified frequency. The A, B, and AB I/Os generate no significant AC or DC currents as they transition. This parameter is guaranteed but not production tested.

SWITCHING CHARACTERISTICS OVER OPERATING RANGE

T_A = -40°C to +85°C, V_{CC} = 5.0V ± 5%;

C_{LOAD} = 50pF, R_{LOAD} = 500Ω unless otherwise noted.

Symbol	Parameter	Min.[1]	Typ.	Max.	Unit
t_{PLH} t_{PHL}	Data Propagation Delay[2,4] AxBx to CxDx, CxDx to AxBx	—	—	1.25[3]	ns
t_{PZH} t_{PZL}	Switch Turn-on Delay $\overline{BE}$ to Ax, Bx, Cx, Dx	1.5	—	7.5	ns
t_{PHZ} t_{PLZ}	Switch Turn-off Delay[2] $\overline{BE}$ to Ax, Bx, Cx, Dx	—	—	5.5	ns

NOTES:
1. Minimums are guaranteed but not production tested.
2. This parameter is guaranteed but not production tested.
3. The time constant for the switch alone is of the order of 1.25ns for C_L = 50pF.
4. The bus switch contributes no propagation delay other than the RC delay of the ON resistance of the switch and the load capacitance. Since this time constant is much smaller than the rise and fall times of typical driving signals, it adds very little propagation delay to the system. Propagation delay of the bus switch, when used in a system, is determined by the driving circuit on the driving side of the switch and its interaction with the load on the driven side.

ORDERING INFORMATION

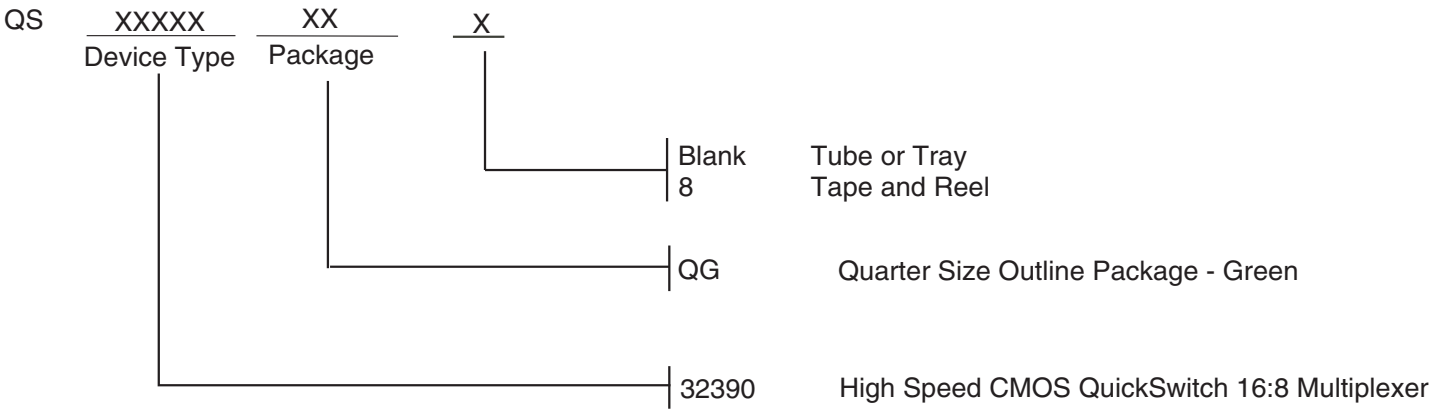

As per PCN L0201-02, the Output Resistance (R_{ON}) specifications have changed as of March 8, 2002. The original specifications were:

Parameter	Description	Min.	Typ.	Max.	Unit
R_{ON}	V_{CC} = Min, V_{IN} = 0V, I_{ON} = 30mA	20	28	40	Ω
	V_{CC} = Min, V_{IN} = 2.4V, I_{ON} = 15mA	24	35	48	

Datasheet Document History

02/09/2011	Pg. 5	Updated the ordering information by removing the "IDT" notation, non RoHS part and by adding Tape and Reel information.

CORPORATE HEADQUARTERS
6024 Silver Creek Valley Road
San Jose, CA 95138

for SALES:
800-345-7015 or 408-284-8200
fax: 408-284-2775
www.idt.com

for Tech Support:
logichelp@idt.com